DRG.NO.	REV.
	0

CW ROTATION
LOOKING FROM DRIVE END

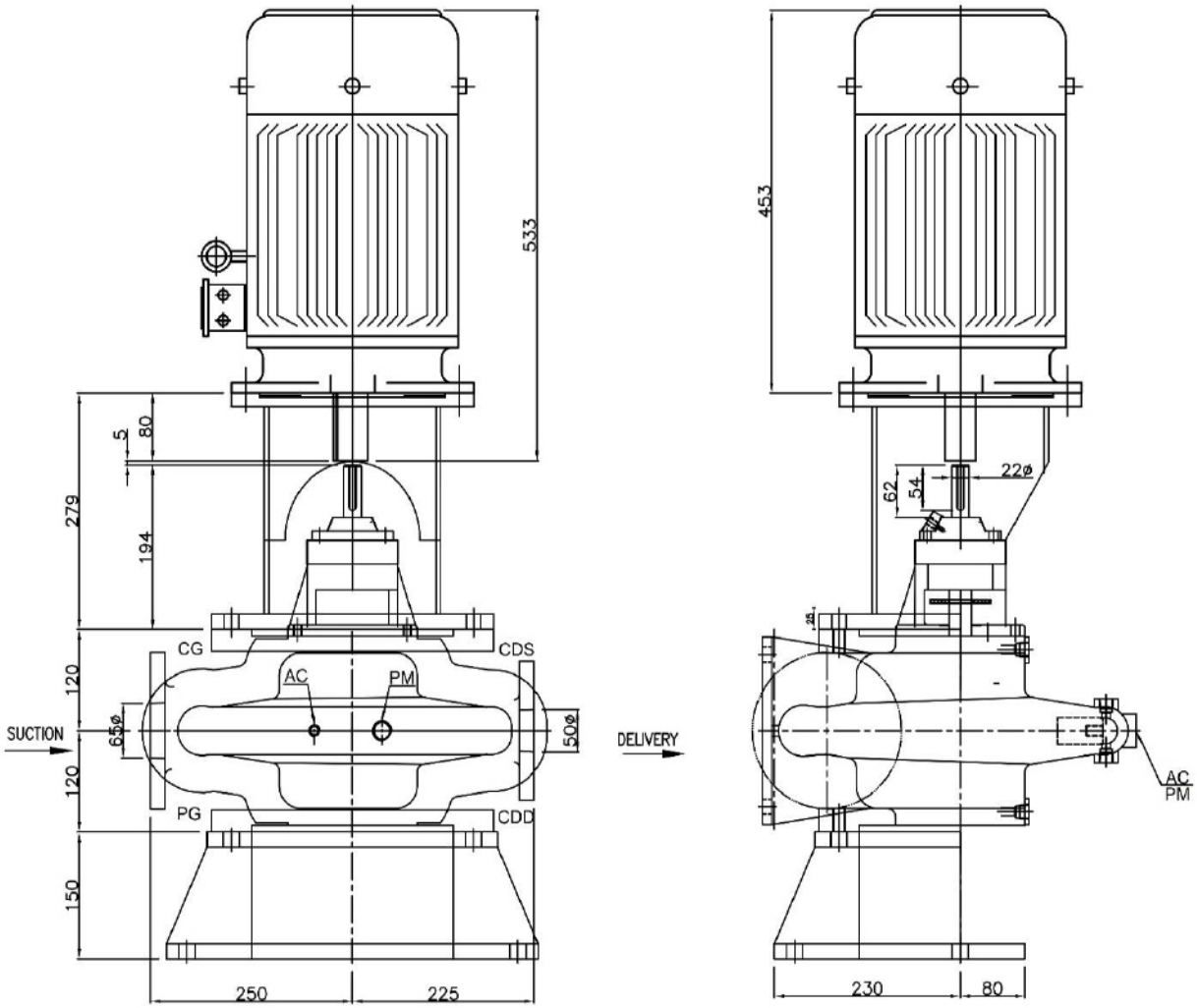

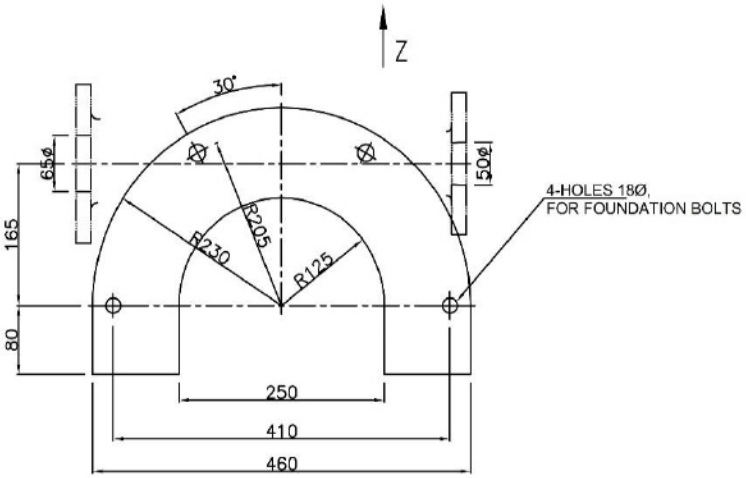

PLAN VIEW DIRECTION –Z
(PUMP STOOL FEET DETAILS)

CONNECTIONS		
ITEM	DESCRIPTION	SIZE(NPT)
CG	COMPOUND GAUGE FOR SUCTION	3/8"
PG	PRESSURE GAUGE FOR DELIVERY	3/8"
AC	AIR COCK	3/8"
PM	PRIMING	1/2"
CDS	CASING DRAIN(SUCTION SIDE)	3/8"
CDD	CASING DRAIN(DELIVERY SIDE)	3/8"

** GAUGE CONNECTIONS DRILLED AND TAPPED ONLY WHEN SPECIFICALLY REQUESTED BY THE CUSTOMER.

S	PN 16	185	145	18	4, ø18	—	—							
D	PN 16							165	125	18	4, ø18	—	—	
REF. NO.	TYPE OF FLANGE	O.D.	P.C.D.	THK MIN	NO. SIZE OF HOLE	RF	ØRF.THK RF FLANGE	O.D.	P.C.D.	THK MIN	NO. SIZE OF HOLE	RF	ØRF.THK RF FLANGE	
		SUCTION – ø65						DELIVERY – ø50						

251054

FISHER PUMP

REV.	DESCRIPTION	DRN	CHKD	DATE

PROJECT NAME–			JOB NO.–
TITLE– GA DRAWING FOR V2HS13 7.5Kw–4P MOTOR TYPE–1			SCALE 1:1
DRN	PS	10.10.13	DRG.NO. / IDENTIFICATION NO. / REV. 0
CHKD	ST	10.10.13	
APPD	HS	10.10.13	

31.01.18 PUMP STOOL 'G'

DRG.NO.	REV.
	0

CW ROTATION
LOOKING FROM DRIVE END

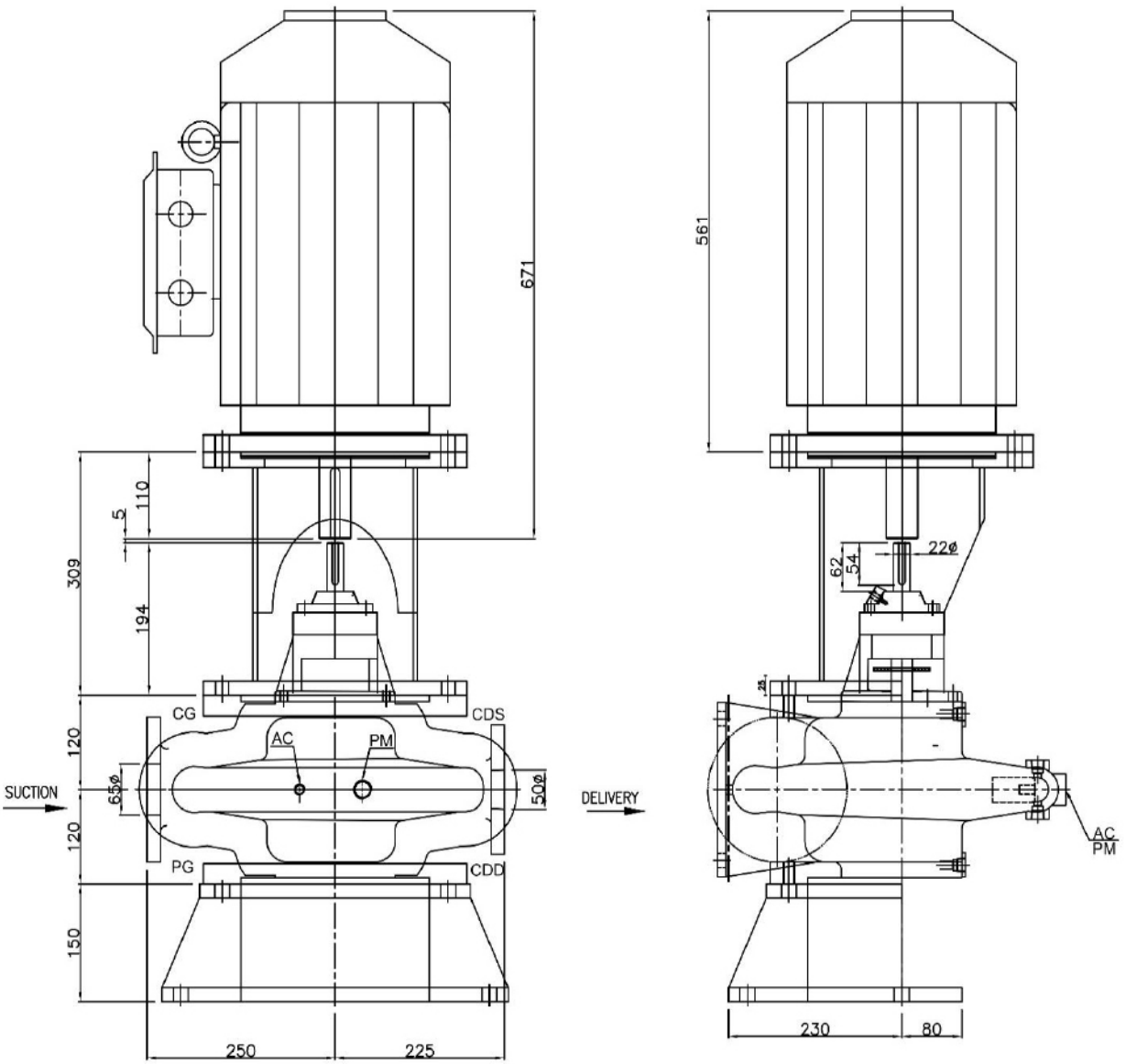

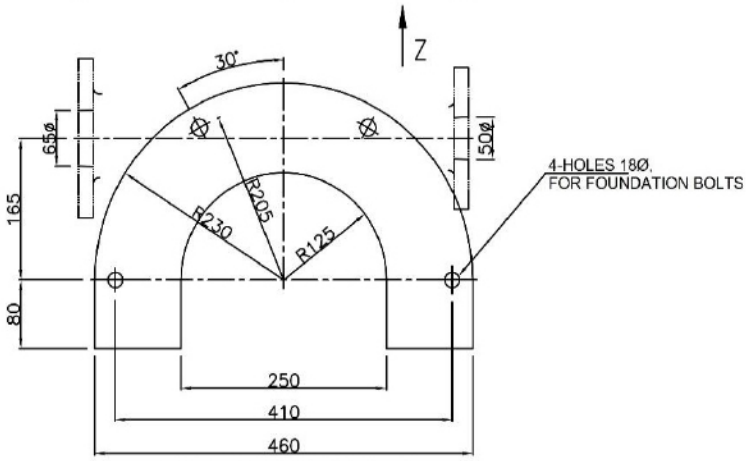

PLAN VIEW DIRECTION –Z
(PUMP STOOL FEET DETAILS)

CONNECTIONS		
ITEM	DESCRIPTION	SIZE(NPT)
CG	COMPOUND GAUGE FOR SUCTION	3/8"
PG	PRESSURE GAUGE FOR DELIVERY	3/8"
AC	AIR COCK	3/8"
PM	PRIMING	1/2"
CDS	CASING DRAIN(SUCTION SIDE)	3/8"
CDD	CASING DRAIN(DELIVERY SIDE)	3/8"

** GAUGE CONNECTIONS DRILLED AND TAPPED ONLY WHEN SPECIFICALLY REQUESTED BY THE CUSTOMER.

S	PN 16	185	145	18	4, ø18	—	—						
D	PN 16							165	125	18	4, ø18	—	—
REF. NO.	TYPE OF FLANGE	O.D.	P.C.D.	THK MIN	NO. SIZE OF HOLE	RF ØRF.	THK RF FLANGE	O.D.	P.C.D.	THK MIN	NO. SIZE OF HOLE	RF ØRF.	THK RF FLANGE
		SUCTION – ø65						DELIVERY – ø50					

251054

REV.	DESCRIPTION	DRN	CHKD	DATE

PROJECT NAME– JOB NO.–

FISHER PUMP

TITLE– GA DRAWING FOR V2HS13
9.3Kw–4P MOTOR TYPE–2

DRN	PS	10.10.13	DRG.NO.	IDENTIFICATION NO.	REV. 0
CHKD	ST	10.10.13			
APPD	HS	10.10.13			

SCALE 1:1

31.01.18 PUMP STOOL 'G'

DRG.NO.	REV.
	0

CW ROTATION
LOOKING FROM DRIVE END

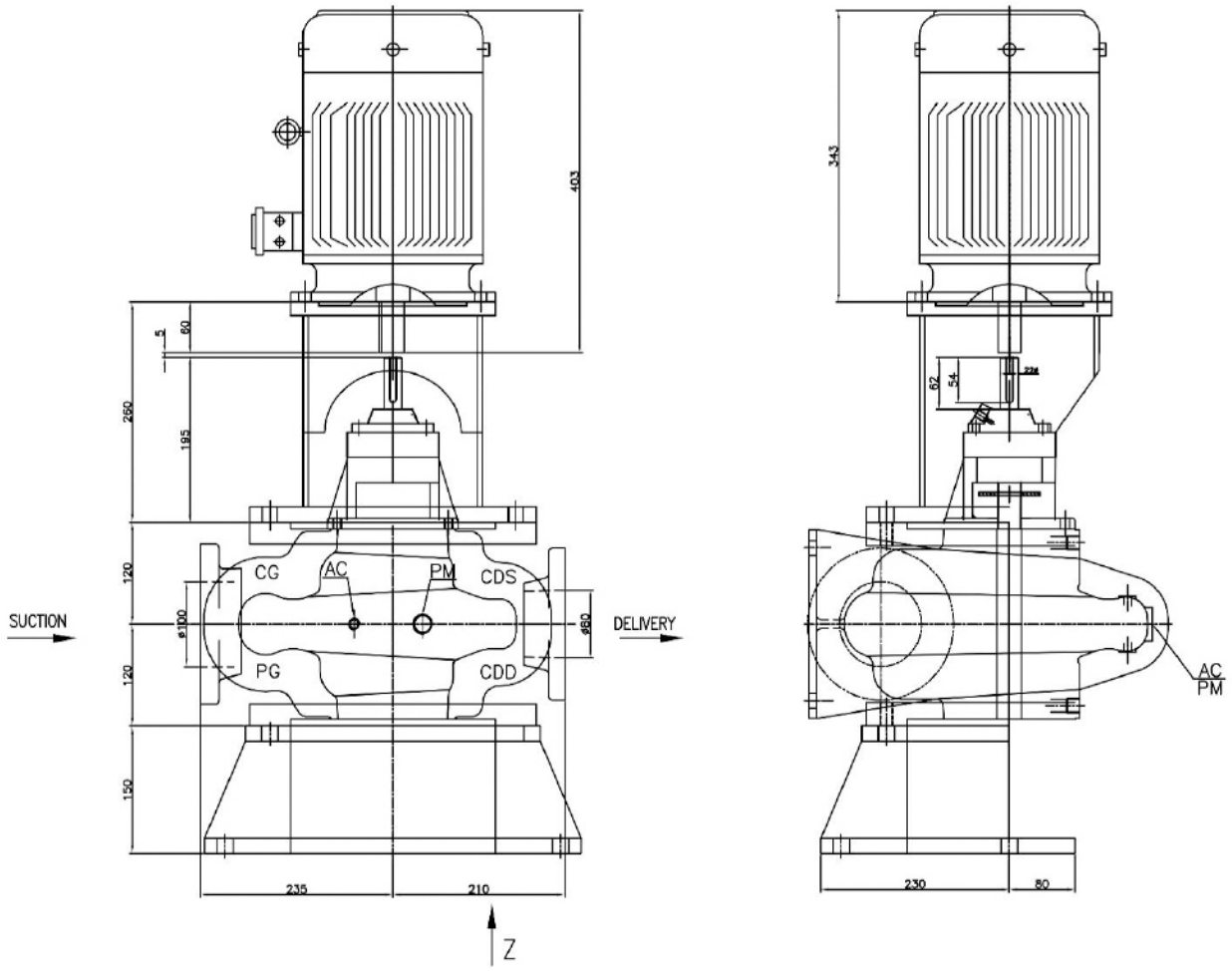

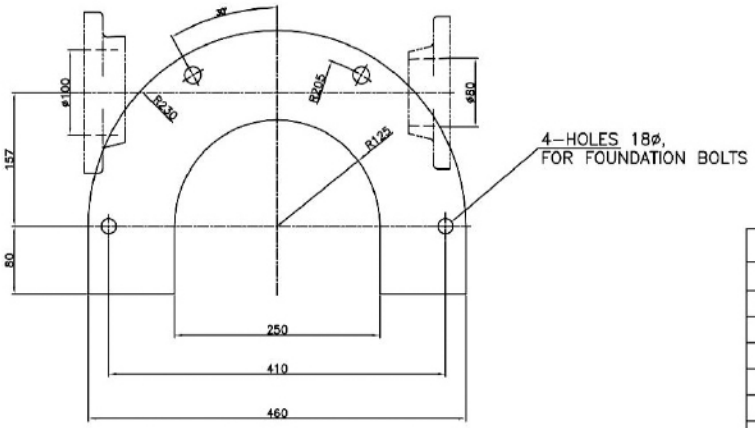

PLAN VIEW DIRECTION -Z
(PUMP STOOL FEET DETAILS)

CONNECTIONS		
ITEM	DESCRIPTION	SIZE(NPT)
CG	COMPOUND GAUGE FOR SUCTION	3/8"
PG	PRESSURE GAUGE FOR DELIVERY	3/8"
AC	AIR COCK	3/8"
PM	PRIMING	1/2"
CDS	CASING DRAIN(SUCTION SIDE)	1/2"
CDD	CASING DRAIN(DELIVERY SIDE)	1/2"

** GAUGE CONNECTIONS DRILLED AND TAPPED ONLY WHEN SPECIFICALLY REQUESTED BY THE CUSTOMER.

REF. NO.	TYPE OF FLANGE	O.D.	P.C.D.	THK MIN	NO. SIZE OF HOLE	RF ØRF.THK RF FLANGE	O.D.	P.C.D.	THK MIN	NO. SIZE OF HOLE	RF ØRF.THK RF FLANGE
S	PN 16	220	180	20	8, ø18	— —					
D	PN 16						200	160	20	8, ø18	— —
		SUCTION - ø100					DELIVERY - ø80				

251054

REV.	DESCRIPTION	DRN	CHKD	DATE

PROJECT NAME-	JOB NO.-
FISHER PUMP	
TITLE- GA DRAWING FOR V3HS10 3.7Kw-4P MOTOR FR 112 TYPE-1	SCALE 1:1

			DRG.NO.	IDENTIFICATION NO.	REV.
DRN	PS	10.10.13			0
CHKD	ST	10.10.13			
APPD	HS	10.10.13			

31.01.18 PUMP STOOL 'G'

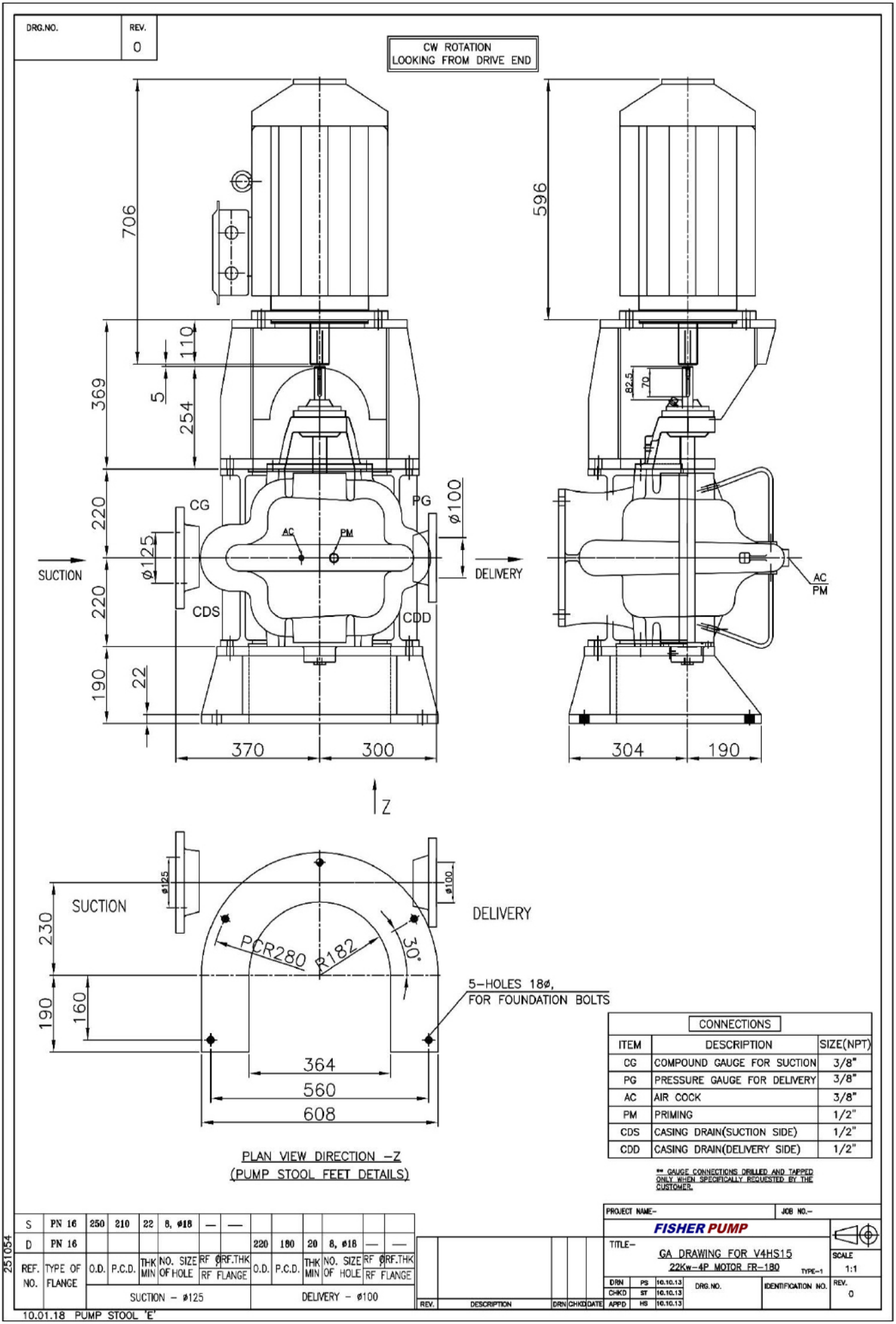
DRG.NO.
REV.
0
CW ROTATION
LOOKING FROM DRIVE END
706
596
110
5
254
369
220
220
190
22
82.5
70
CG
PG
AC
PM
ø125
ø100
SUCTION
DELIVERY
CDS
CDD
AC
PM
370
300
304
190
Z
ø125
ø100
SUCTION
DELIVERY
230
190
160
PCR280
R182
30°
5-HOLES 18ø,
FOR FOUNDATION BOLTS
364
560
608
PLAN VIEW DIRECTION -Z
(PUMP STOOL FEET DETAILS)
CONNECTIONS
ITEM | DESCRIPTION | SIZE(NPT)
CG | COMPOUND GAUGE FOR SUCTION | 3/8"
PG | PRESSURE GAUGE FOR DELIVERY | 3/8"
AC | AIR COCK | 3/8"
PM | PRIMING | 1/2"
CDS | CASING DRAIN(SUCTION SIDE) | 1/2"
CDD | CASING DRAIN(DELIVERY SIDE) | 1/2"
** GAUGE CONNECTIONS DRILLED AND TAPPED ONLY WHEN SPECIFICALLY REQUESTED BY THE CUSTOMER.
S | PN 16 | 250 | 210 | 22 | 8, ø18 | — | — | | | | | | |
D | PN 16 | | | | | | | 220 | 180 | 20 | 8, ø18 | — | —
REF. NO. | TYPE OF FLANGE | O.D. | P.C.D. | THK MIN | NO. SIZE OF HOLE | RF Ø | RF.THK RF FLANGE | O.D. | P.C.D. | THK MIN | NO. SIZE OF HOLE | RF Ø | RF.THK RF FLANGE
SUCTION - ø125
DELIVERY - ø100
REV. | DESCRIPTION | DRN | CHKD | DATE
PROJECT NAME-
JOB NO.-
FISHER PUMP
TITLE-
GA DRAWING FOR V4HS15
22Kw-4P MOTOR FR-180
TYPE-1
SCALE 1:1
DRN PS 10.10.13
CHKD ST 10.10.13
APPD HS 10.10.13
DRG.NO.
IDENTIFICATION NO.
REV. 0
251054
10.01.18 PUMP STOOL 'E'

DRG.NO.	REV.
	0

CW ROTATION
LOOKING FROM DRIVE END

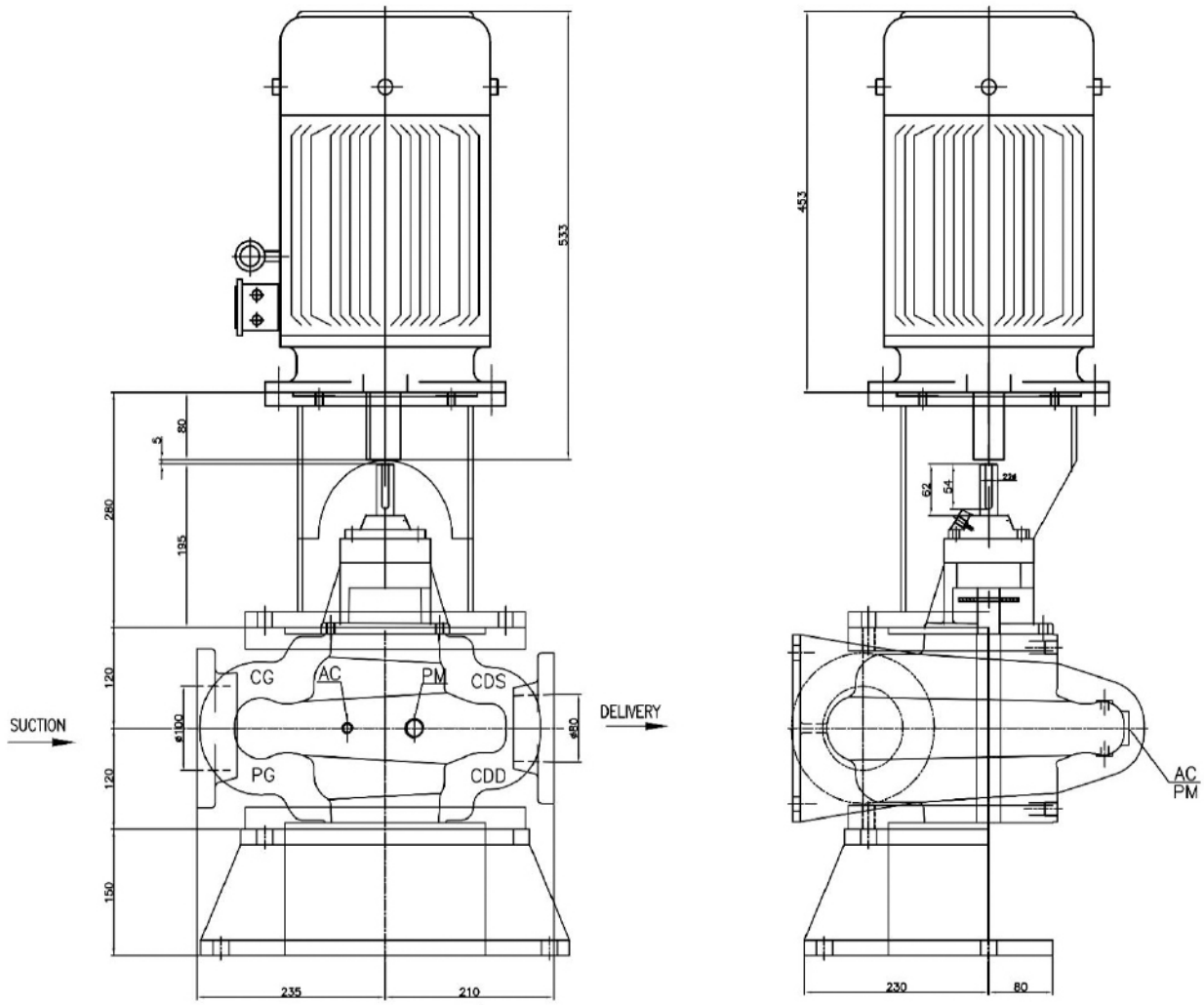

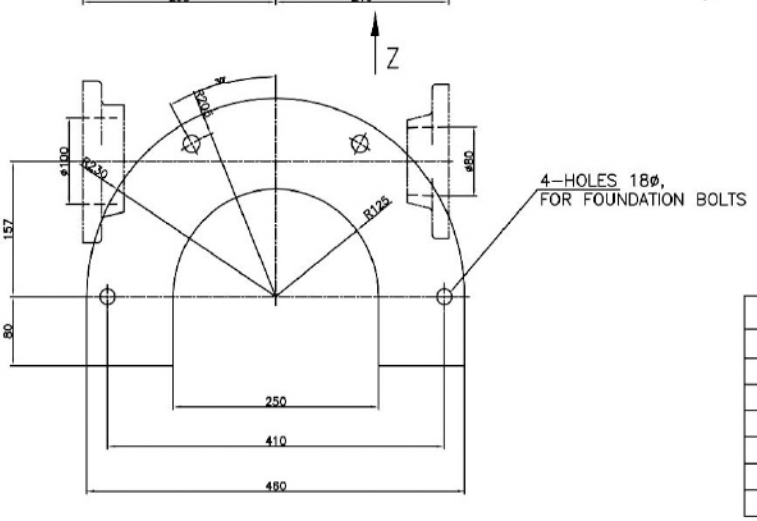

PLAN VIEW DIRECTION -Z
(PUMP STOOL FEET DETAILS)

CONNECTIONS		
ITEM	DESCRIPTION	SIZE(NPT)
CG	COMPOUND GAUGE FOR SUCTION	3/8"
PG	PRESSURE GAUGE FOR DELIVERY	3/8"
AC	AIR COCK	3/8"
PM	PRIMING	1/2"
CDS	CASING DRAIN(SUCTION SIDE)	1/2"
CDD	CASING DRAIN(DELIVERY SIDE)	1/2"

** GAUGE CONNECTIONS DRILLED AND TAPPED ONLY WHEN SPECIFICALLY REQUESTED BY THE CUSTOMER.

REF. NO.	TYPE OF FLANGE	SUCTION - ø100 O.D.	SUCTION - ø100 P.C.D.	SUCTION - ø100 THK MIN	SUCTION - ø100 NO. SIZE OF HOLE	SUCTION - ø100 RF ø RF.THK RF FLANGE	DELIVERY - ø80 O.D.	DELIVERY - ø80 P.C.D.	DELIVERY - ø80 THK MIN	DELIVERY - ø80 NO. SIZE OF HOLE	DELIVERY - ø80 RF ø RF.THK RF FLANGE
S	PN 16	220	180	20	8, ø18	— —					
D	PN 16						200	160	20	8, ø18	— —

REV.	DESCRIPTION	DRN	CHKD	DATE

PROJECT NAME- | JOB NO.-

FISHER PUMP

TITLE- GA DRAWING FOR V3HS10
5.5Kw-4P MOTOR FR-132
TYPE-2

SCALE 1:1

			DRG.NO.	IDENTIFICATION NO.	REV.
DRN	PS	10.10.13			0
CHKD	ST	10.10.13			
APPD	HS	10.10.13			

251054

31.01.18 PUMP STOOL 'G'

DRG.NO.	REV.
	0

CW ROTATION
LOOKING FROM DRIVE END

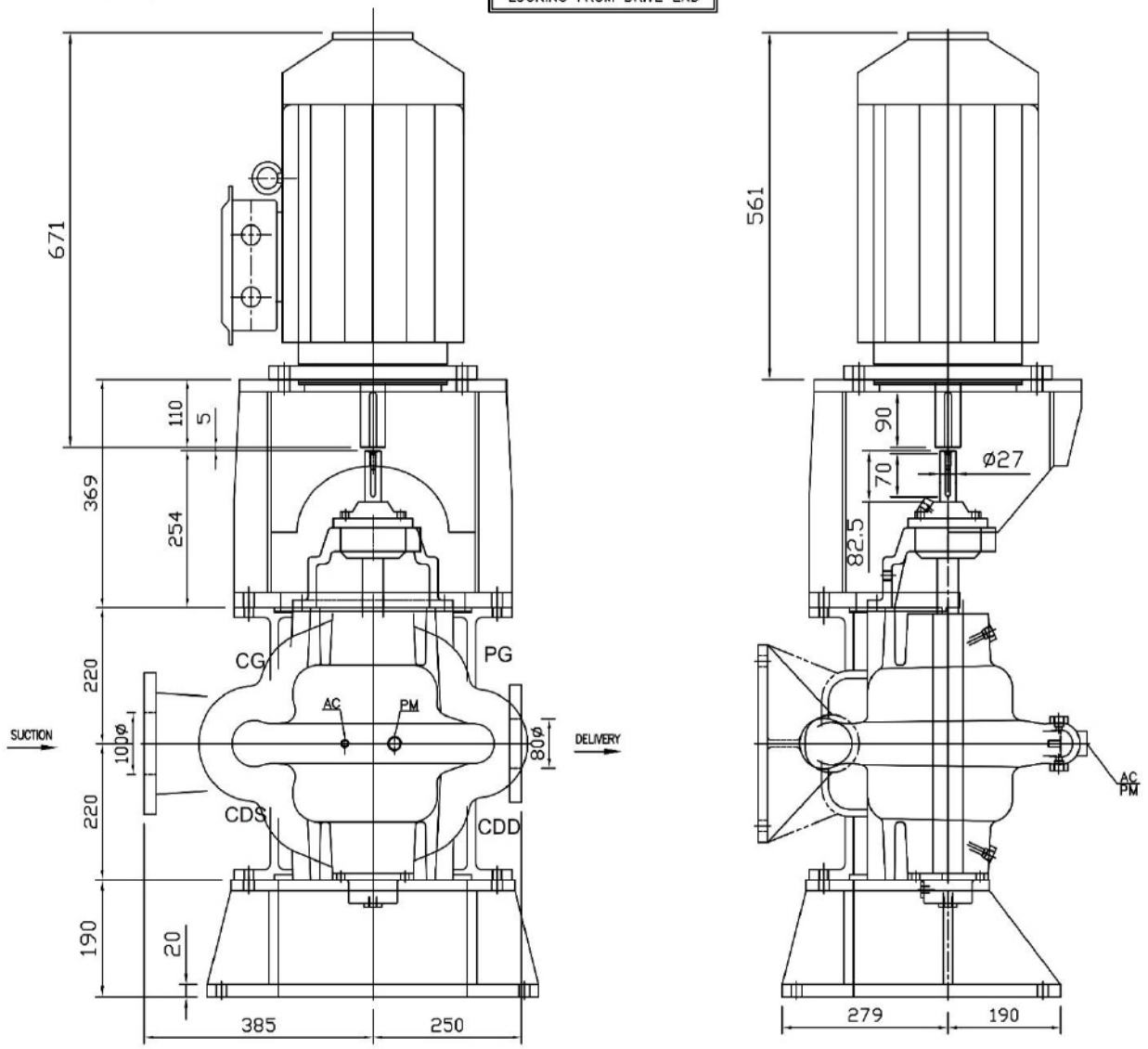

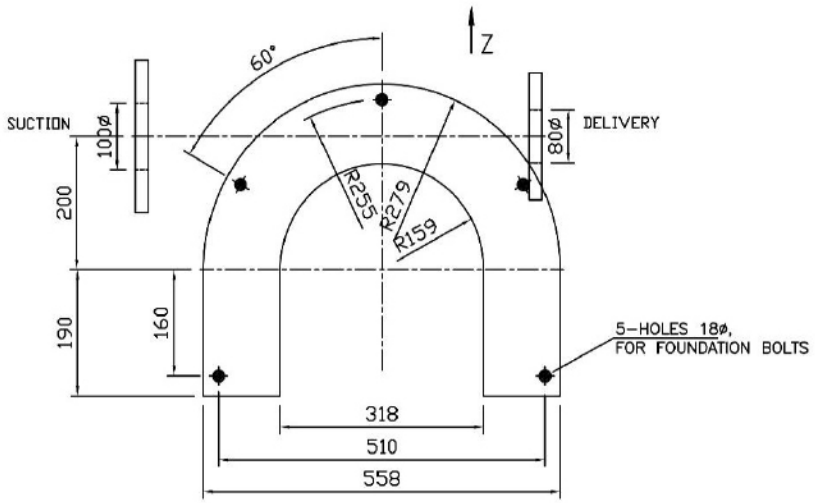

PLAN VIEW DIRECTION -Z
(PUMP STOOL FEET DETAILS)

CONNECTIONS		
ITEM	DESCRIPTION	SIZE(NPT)
CG	COMPOUND GAUGE FOR SUCTION	3/8"
PG	PRESSURE GAUGE FOR DELIVERY	3/8"
AC	AIR COCK	3/8"
PM	PRIMING	1/2"
CDS	CASING DRAIN(SUCTION SIDE)	1/2"
CDD	CASING DRAIN(DELIVERY SIDE)	1/2"

** GAUGE CONNECTIONS DRILLED AND TAPPED ONLY WHEN SPECIFICALLY REQUESTED BY THE CUSTOMER.

S	PN 16	220	180	20	8, ø18	—	—						
D	PN 16							200	160	20	8, ø18	—	—
REF. NO.	TYPE OF FLANGE	O.D.	P.C.D.	THK MIN	NO. SIZE OF HOLE	RF ø RF FLANGE	THK	O.D.	P.C.D.	THK MIN	NO. SIZE OF HOLE	RF ø RF FLANGE	THK
		SUCTION - ø100						DELIVERY - ø80					

REV.	DESCRIPTION	DRN	CHKD	DATE

PROJECT NAME:- JOB NO.:-

FISHER PUMP

TITLE:- GA DRAWING FOR V3HS13
15Kw-4P MOTOR FR-160 TYPE-1

DRN	PS	10.10.13	DRG. NO.	IDENTIFICATION NO.
CHKD	ST	10.10.13		
APPD	HS	10.10.13		

SCALE 1:1

REV. 0

17.01.18 PUMP STOOL pcr 209

DRG.NO.	REV.
	0

CW ROTATION
LOOKING FROM DRIVE END

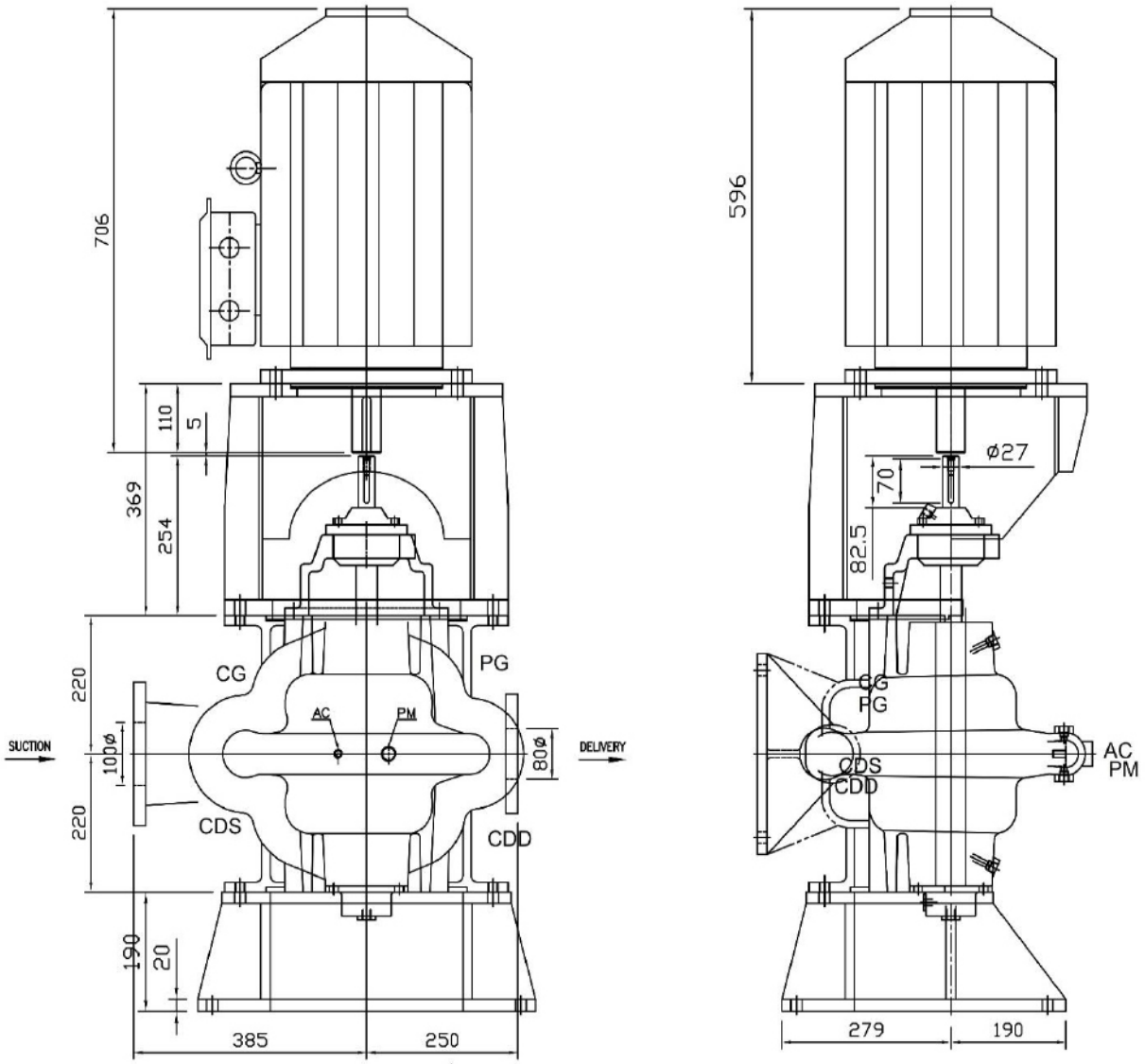

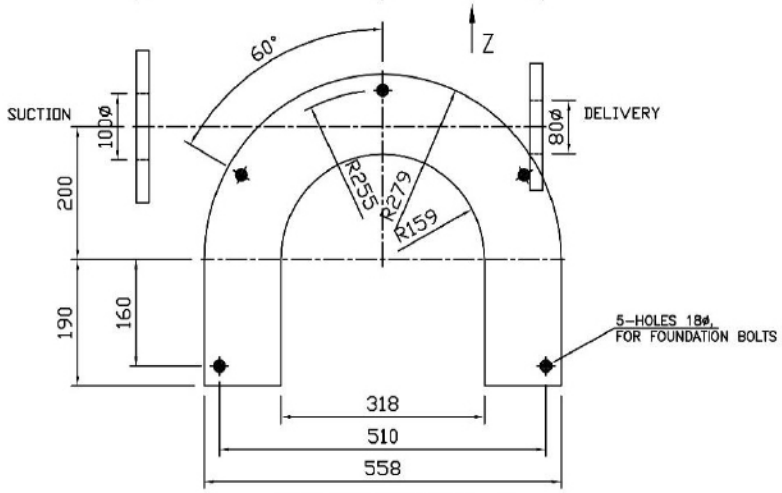

PLAN VIEW DIRECTION –Z
(PUMP STOOL FEET DETAILS)

CONNECTIONS		
ITEM	DESCRIPTION	SIZE(NPT)
CG	COMPOUND GAUGE FOR SUCTION	3/8"
PG	PRESSURE GAUGE FOR DELIVERY	3/8"
AC	AIR COCK	3/8"
PM	PRIMING	1/2"
CDS	CASING DRAIN(SUCTION SIDE)	1/2"
CDD	CASING DRAIN(DELIVERY SIDE)	1/2"

** GAUGE CONNECTIONS DRILLED AND TAPPED ONLY WHEN SPECIFICALLY REQUESTED BY THE CUSTOMER.

S	PN 16	220	180	20	8, ø18	—	—						
D	PN 16							200	160	20	8, ø18	—	—
REF. NO.	TYPE OF FLANGE	O.D.	P.C.D.	THK MIN	NO. SIZE OF HOLE	RF Ø RF FLANGE	RF.THK RF FLANGE	O.D.	P.C.D.	THK MIN	NO. SIZE OF HOLE	RF Ø RF FLANGE	RF.THK RF FLANGE
		SUCTION – ø100						DELIVERY – ø80					

REV.	DESCRIPTION	DRN	CHKD	DATE

PROJECT NAME– JOB NO.–

FISHER PUMP

TITLE– GA DRAWING FOR V3HS13
18.5Kw–4P MOTOR FR–180

TYPE–2

DRN	PS	10.10.13	DRG.NO.
CHKD	ST	10.10.13	
APPD	HS	10.10.13	

IDENTIFICATION NO.

SCALE 1:1

REV. 0

17.01.18 PUMP STOOL pcr 209

DRG.NO.	REV.
	0

CW ROTATION
LOOKING FROM DRIVE END

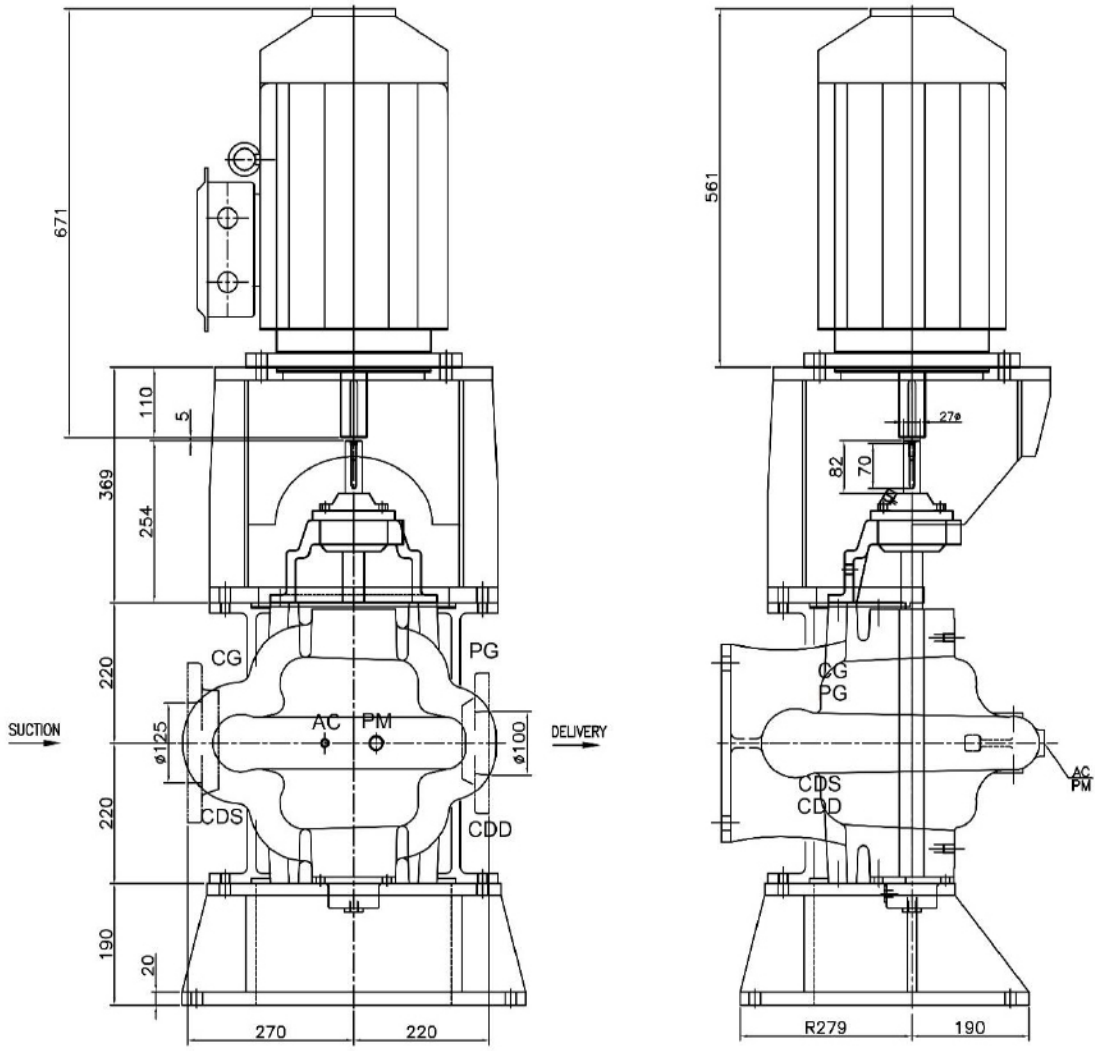

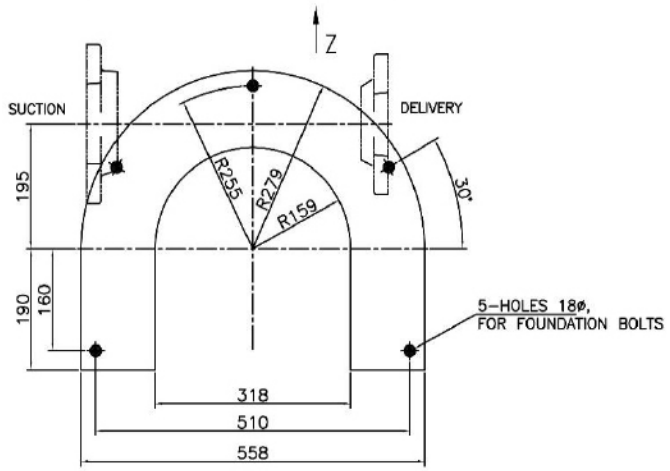

PLAN VIEW DIRECTION –Z
(PUMP STOOL FEET DETAILS)

CONNECTIONS		
ITEM	DESCRIPTION	SIZE(NPT)
CG	COMPOUND GAUGE FOR SUCTION	3/8"
PG	PRESSURE GAUGE FOR DELIVERY	3/8"
AC	AIR COCK	3/8"
PM	PRIMING	1/2"
CDS	CASING DRAIN(SUCTION SIDE)	1/2"
CDD	CASING DRAIN(DELIVERY SIDE)	1/2"

** GAUGE CONNECTIONS DRILLED AND TAPPED ONLY WHEN SPECIFICALLY REQUESTED BY THE CUSTOMER.

S	PN 16	250	210	22	8, ø18	—	—						
D	PN 16							220	160	20	8, ø18	—	—
REF. NO.	TYPE OF FLANGE	O.D.	P.C.D.	THK MIN	NO. SIZE OF HOLE	RF ØRF.THK RF FLANGE		O.D.	P.C.D.	THK MIN	NO. SIZE OF HOLE	RF ØRF.THK RF FLANGE	
		SUCTION – ø125						DELIVERY – ø100					

251054

REV.	DESCRIPTION	DRN	CHKD	DATE

PROJECT NAME–	JOB NO.–
FISHER PUMP	
TITLE– GA DRAWING FOR V4HS11 11&15Kw–4P MOTOR FR–160 TYPE–1	SCALE 1:1
DRN PS 10.10.13 / CHKD ST 10.10.13 / APPD HS 10.10.13	DRG.NO. / IDENTIFICATION NO. / REV. 0

12.01.18 PUMP STOOL 'C'

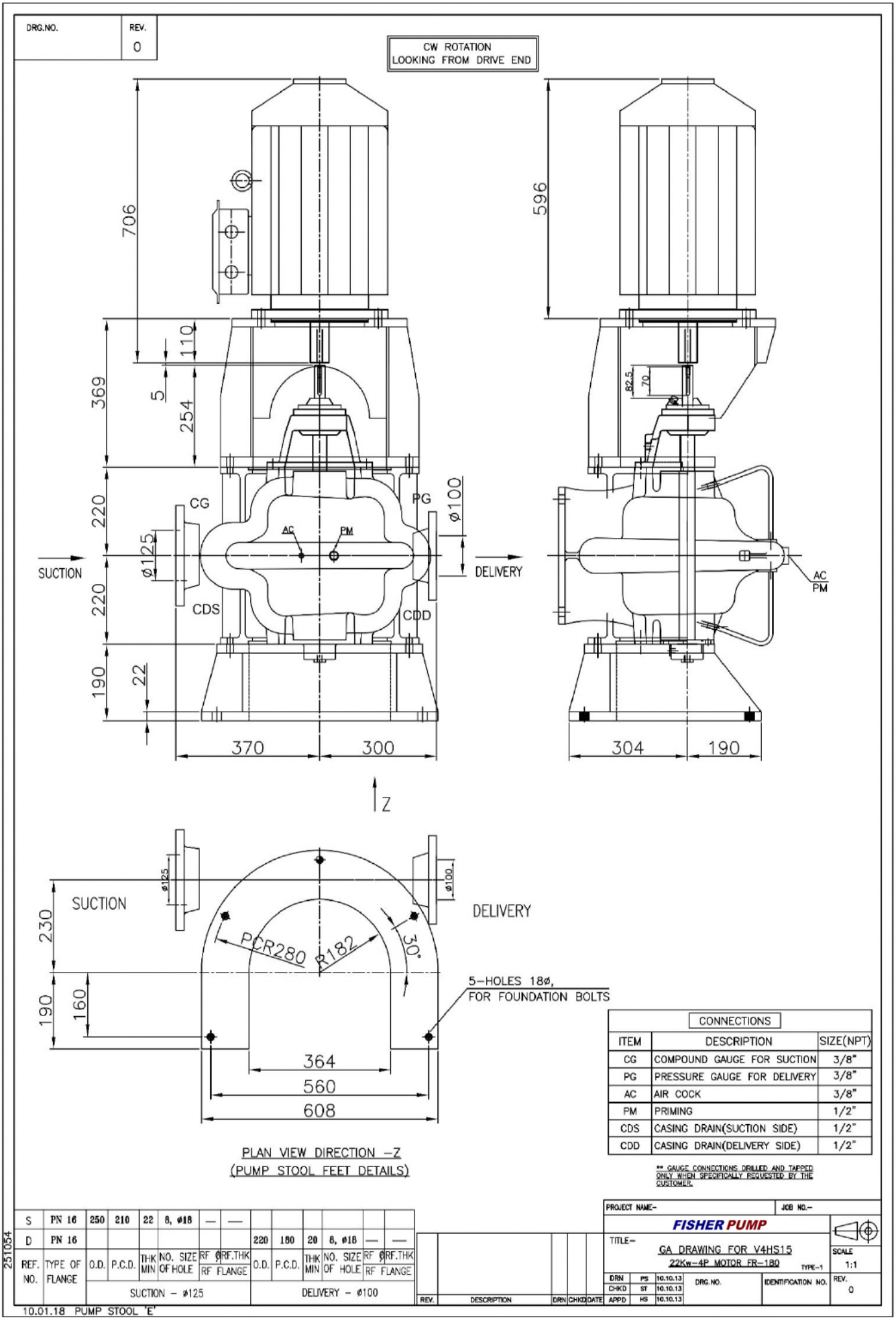
DRG.NO.
REV.
0
CW ROTATION
LOOKING FROM DRIVE END
706
596
110
369
5
254
220
220
190
22
82.5
70
CG
PG
AC
PM
ø125
ø100
SUCTION
DELIVERY
CDS
CDD
AC
PM
370
300
304
190
Z
SUCTION
DELIVERY
ø125
ø100
230
190
160
PCR280
R182
30°
5-HOLES 18ø,
FOR FOUNDATION BOLTS
364
560
608
PLAN VIEW DIRECTION -Z
(PUMP STOOL FEET DETAILS)
CONNECTIONS
ITEM | DESCRIPTION | SIZE(NPT)
CG | COMPOUND GAUGE FOR SUCTION | 3/8"
PG | PRESSURE GAUGE FOR DELIVERY | 3/8"
AC | AIR COCK | 3/8"
PM | PRIMING | 1/2"
CDS | CASING DRAIN(SUCTION SIDE) | 1/2"
CDD | CASING DRAIN(DELIVERY SIDE) | 1/2"
** GAUGE CONNECTIONS DRILLED AND TAPPED ONLY WHEN SPECIFICALLY REQUESTED BY THE CUSTOMER.
S | PN 16 | 250 | 210 | 22 | 8, ø18 | — | — | | | | | | |
D | PN 16 | | | | | | | 220 | 180 | 20 | 8, ø18 | — | —
REF. NO. | TYPE OF FLANGE | O.D. | P.C.D. | THK MIN | NO. SIZE OF HOLE | RF ø RF FLANGE | RF.THK | O.D. | P.C.D. | THK MIN | NO. SIZE OF HOLE | RF ø RF FLANGE | RF.THK
SUCTION - ø125
DELIVERY - ø100
251054
10.01.18 PUMP STOOL 'E'
REV. | DESCRIPTION | DRN | CHKD | DATE
PROJECT NAME-
JOB NO.-
FISHER PUMP
TITLE-
GA DRAWING FOR V4HS15
22Kw-4P MOTOR FR-180
TYPE-1
SCALE 1:1
DRN PS 10.10.13
CHKD ST 10.10.13
APPD HS 10.10.13
DRG. NO.
IDENTIFICATION NO.
REV. 0

DRG.NO.	REV.
	0

CW ROTATION
LOOKING FROM DRIVE END

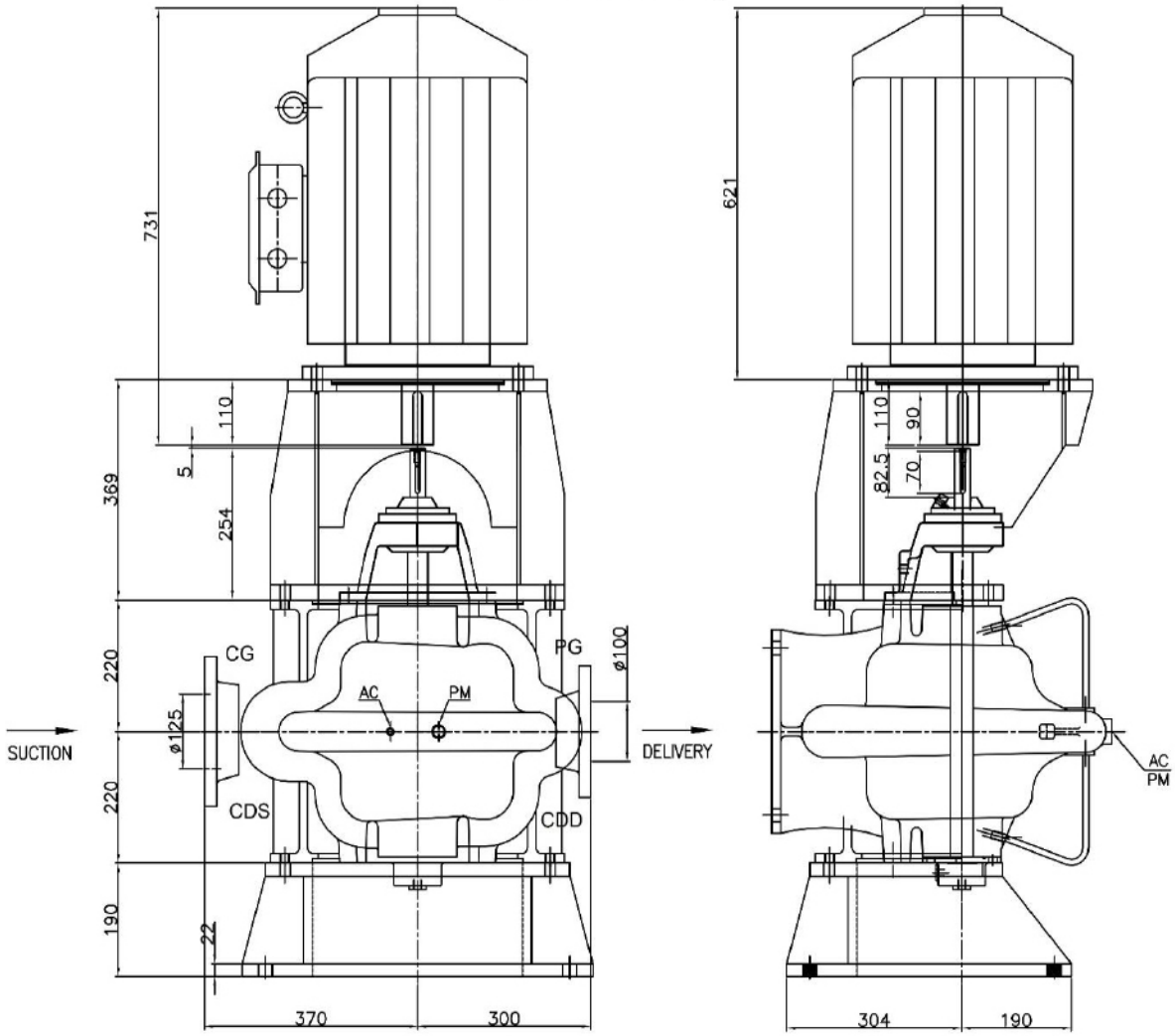

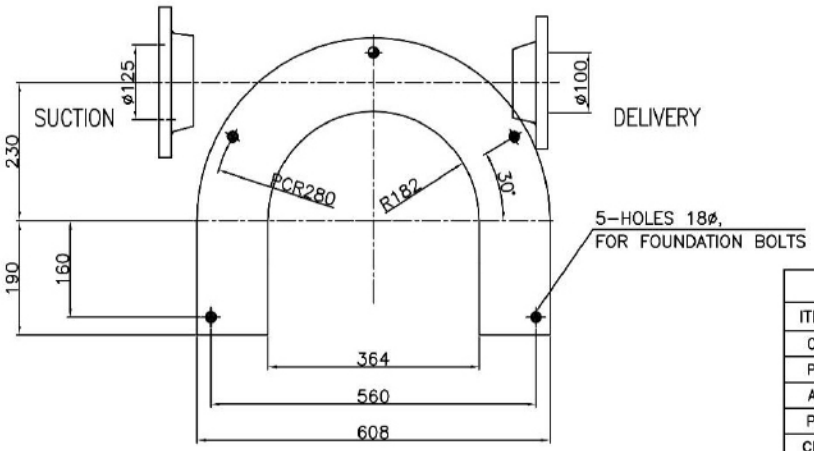

PLAN VIEW DIRECTION –Z
(PUMP STOOL FEET DETAILS)

CONNECTIONS		
ITEM	DESCRIPTION	SIZE(NPT)
CG	COMPOUND GAUGE FOR SUCTION	3/8"
PG	PRESSURE GAUGE FOR DELIVERY	3/8"
AC	AIR COCK	3/8"
PM	PRIMING	1/2"
CDS	CASING DRAIN(SUCTION SIDE)	1/2"
CDD	CASING DRAIN(DELIVERY SIDE)	1/2"

** GAUGE CONNECTIONS DRILLED AND TAPPED ONLY WHEN SPECIFICALLY REQUESTED BY THE CUSTOMER.

REF. NO.	TYPE OF FLANGE	O.D.	P.C.D.	THK MIN	NO. SIZE OF HOLE	RF Ø / RF.THK RF FLANGE		O.D.	P.C.D.	THK MIN	NO. SIZE OF HOLE	RF Ø / RF.THK RF FLANGE	
		SUCTION – ø125						DELIVERY – ø100					
S	PN 16	250	210	22	8, ø18	—	—						
D	PN 16							220	180	20	8, ø18	—	—

251054

REV.	DESCRIPTION	DRN	CHKD	DATE

PROJECT NAME– | JOB NO.–

FISHER PUMP

TITLE– GA DRAWING FOR V4HS15
30Kw–4P MOTOR FR–200 TYPE–2

DRN	PS	10.10.13	DRG. NO.
CHKD	ST	10.10.13	
APPD	HS	10.10.13	

IDENTIFICATION NO.

SCALE 1:1

REV. 0

10.01.18 PUMP STOOL 'E'

DRG.NO.	REV.
	0

CW ROTATION
LOOKING FROM DRIVE END

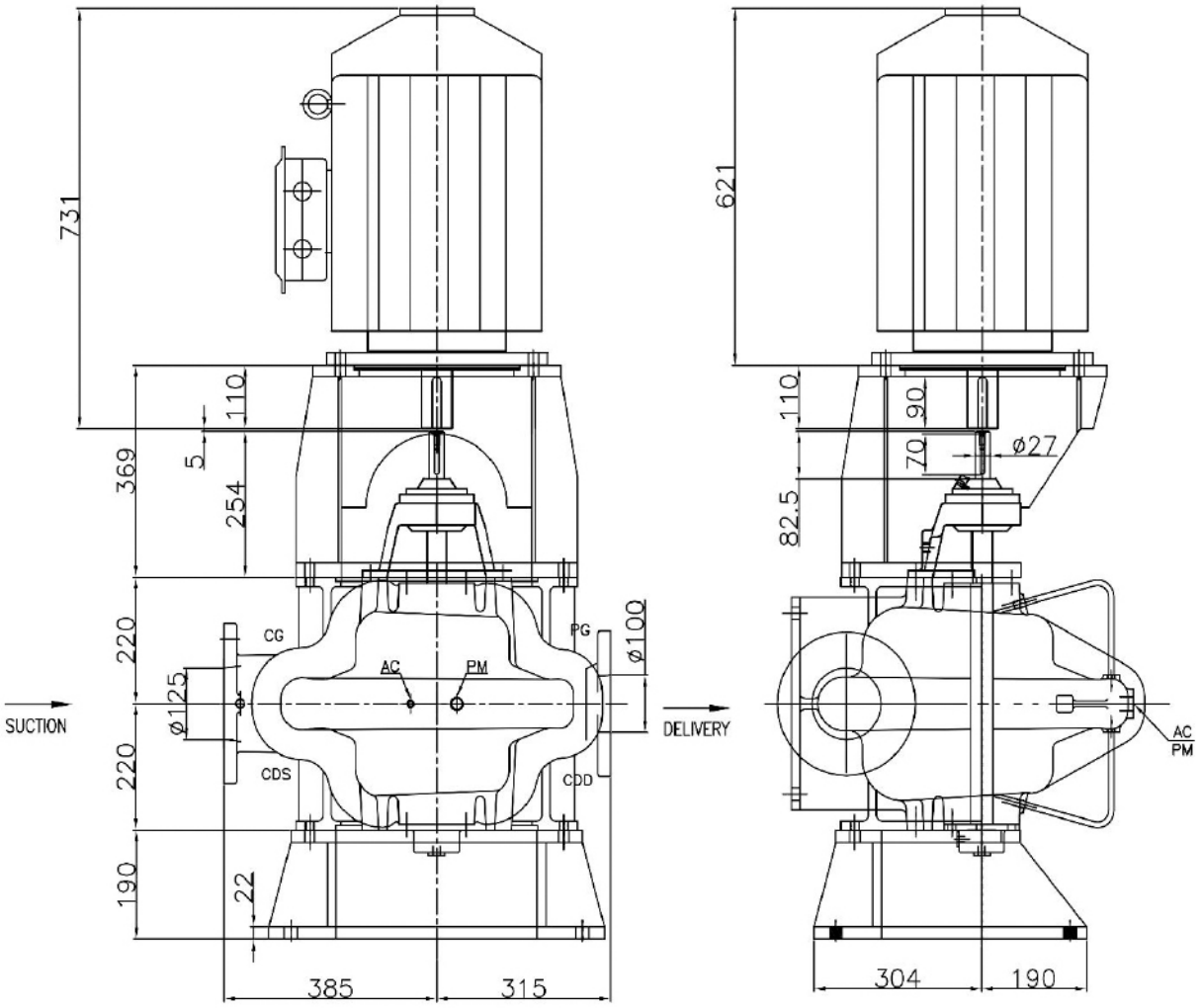

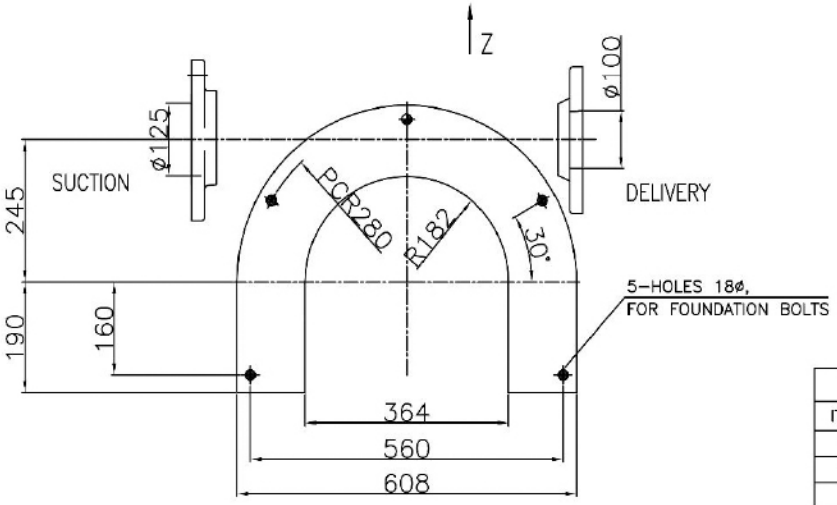

PLAN VIEW DIRECTION -Z
(PUMP STOOL FEET DETAILS)

CONNECTIONS		
ITEM	DESCRIPTION	SIZE(NPT)
CG	COMPOUND GAUGE FOR SUCTION	3/8"
PG	PRESSURE GAUGE FOR DELIVERY	3/8"
AC	AIR COCK	3/8"
PM	PRIMING	1/2"
CDS	CASING DRAIN(SUCTION SIDE)	1/2"
CDD	CASING DRAIN(DELIVERY SIDE)	1/2"

** GAUGE CONNECTIONS DRILLED AND TAPPED ONLY WHEN SPECIFICALLY REQUESTED BY THE CUSTOMER.

S	PN 16	250	210	22	8, ø18	—	—						
D	PN 16							220	180	20	8, ø18	—	—
REF. NO.	TYPE OF FLANGE	O.D.	P.C.D.	THK MIN	NO. SIZE OF HOLE	RF ø RF FLANGE	RF.THK	O.D.	P.C.D.	THK MIN	NO. SIZE OF HOLE	RF ø RF FLANGE	RF.THK
		SUCTION – ø125						DELIVERY – ø100					

251054

REV.	DESCRIPTION	DRN	CHKD	DATE

PROJECT NAME–			JOB NO.–
FISHER PUMP			
TITLE– GA DRAWING FOR V4HS16 30Kw–4P MOTOR FR–200 TYPE–1			SCALE 1:1
DRN	PS	10.10.13	DRG.NO. / IDENTIFICATION NO. / REV. 0
CHKD	ST	10.10.13	
APPD	HS	10.10.13	

13.01.18 PUMP STOOL 'E'

DRG.NO.	REV.
	0

CW ROTATION
LOOKING FROM DRIVE END

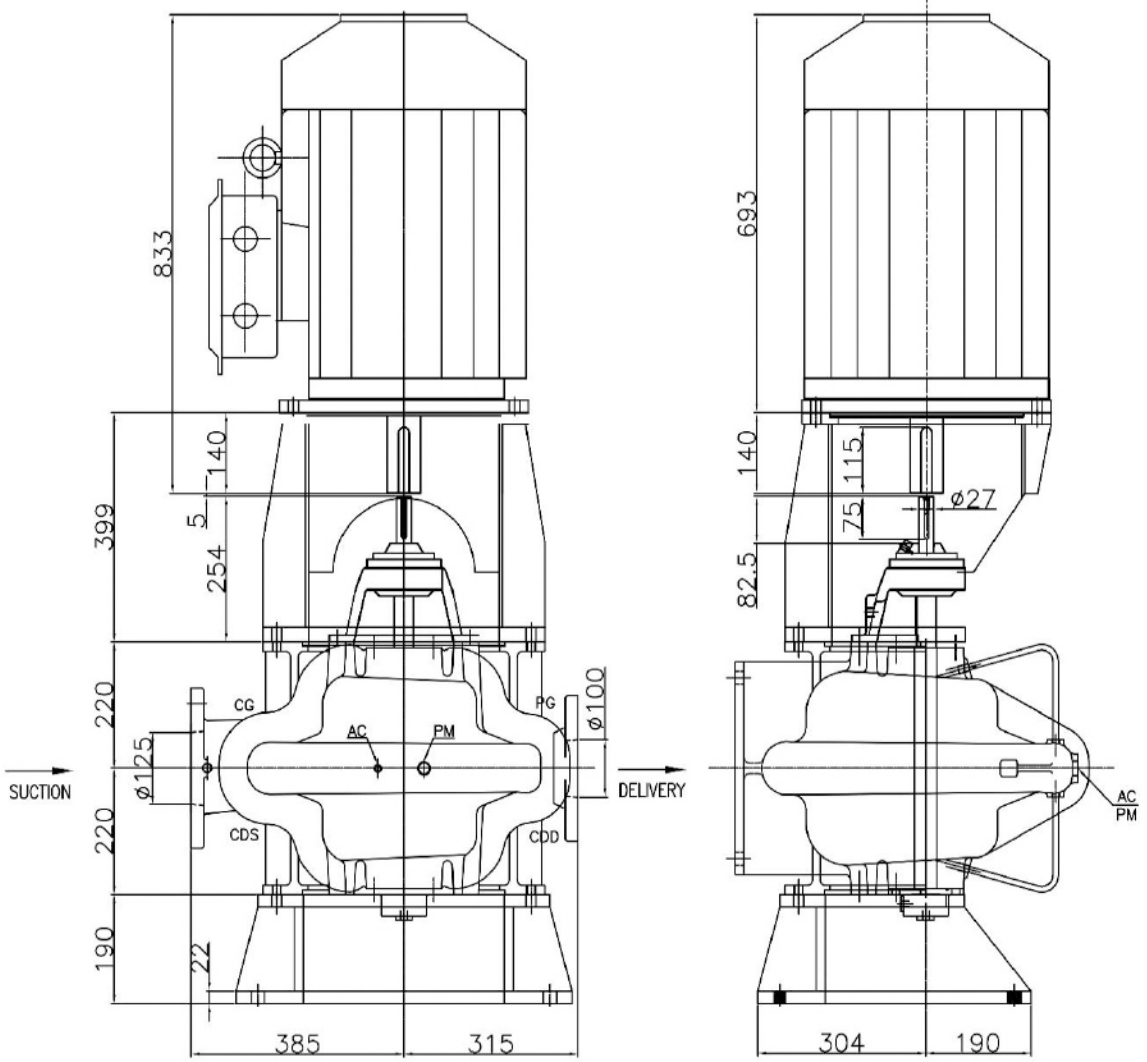

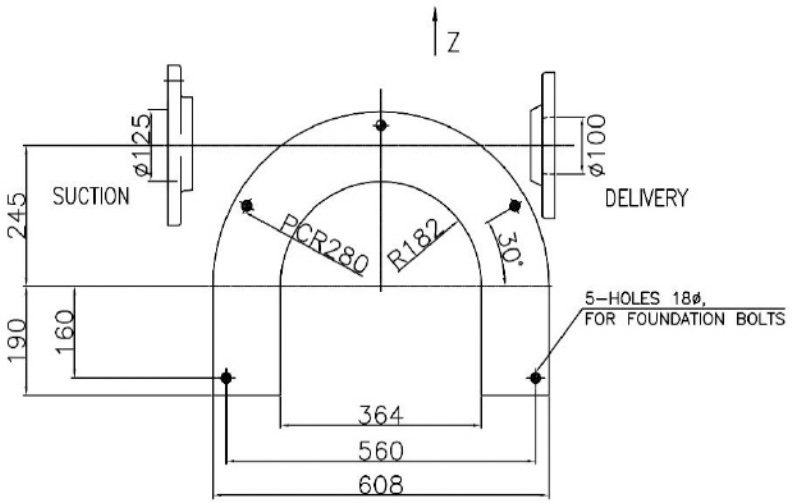

PLAN VIEW DIRECTION –Z
(PUMP STOOL FEET DETAILS)

CONNECTIONS		
ITEM	DESCRIPTION	SIZE(NPT)
CG	COMPOUND GAUGE FOR SUCTION	3/8"
PG	PRESSURE GAUGE FOR DELIVERY	3/8"
AC	AIR COCK	3/8"
PM	PRIMING	1/2"
CDS	CASING DRAIN(SUCTION SIDE)	1/2"
CDD	CASING DRAIN(DELIVERY SIDE)	1/2"

** GAUGE CONNECTIONS DRILLED AND TAPPED ONLY WHEN SPECIFICALLY REQUESTED BY THE CUSTOMER.

REF. NO.	TYPE OF FLANGE	O.D.	P.C.D.	THK MIN	NO. SIZE OF HOLE	RF Ø	RF.THK RF FLANGE	O.D.	P.C.D.	THK MIN	NO. SIZE OF HOLE	RF Ø	RF.THK RF FLANGE
S	PN 16	250	210	22	8, ø18	—	—						
D	PN 16							220	180	20	8, ø18	—	—
		SUCTION – ø125						DELIVERY – ø100					

251054

13.01.18 PUMP STOOL 'E'

REV.	DESCRIPTION	DRN	CHKD	DATE

PROJECT NAME:– JOB NO.:–

FISHER PUMP

TITLE:– GA DRAWING FOR V4HS16
45Kw–4P MOTOR FR–225
TYPE–2

DRN	PS	10.10.13	DRG.NO.
CHKD	ST	10.10.13	
APPD	HS	10.10.13	

IDENTIFICATION NO.

SCALE 1:1

REV. 0

DRG.NO.	REV.
	0

CW ROTATION
LOOKING FROM DRIVE END

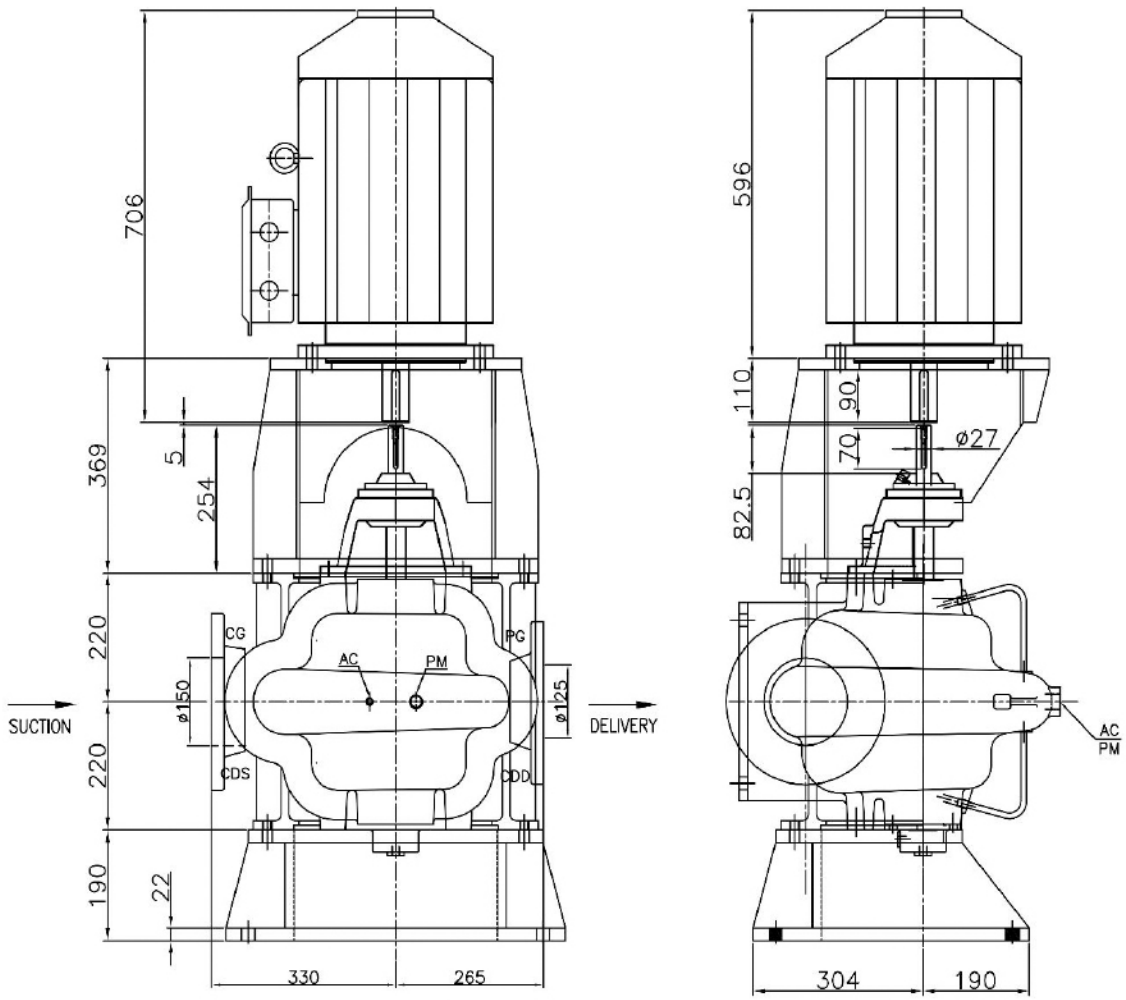

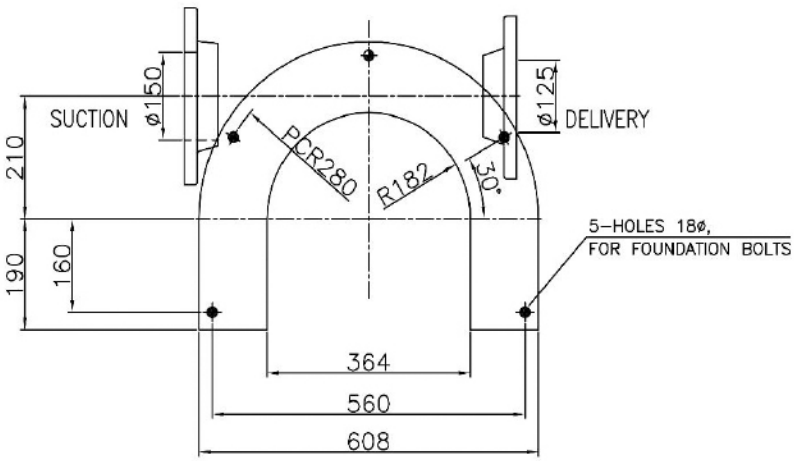

PLAN VIEW DIRECTION –Z
(PUMP STOOL FEET DETAILS)

CONNECTIONS		
ITEM	DESCRIPTION	SIZE(NPT)
CG	COMPOUND GAUGE FOR SUCTION	3/8"
PG	PRESSURE GAUGE FOR DELIVERY	3/8"
AC	AIR COCK	3/8"
PM	PRIMING	1/2"
CDS	CASING DRAIN(SUCTION SIDE)	1/2"
CDD	CASING DRAIN(DELIVERY SIDE)	1/2"

** GAUGE CONNECTIONS DRILLED AND TAPPED ONLY WHEN SPECIFICALLY REQUESTED BY THE CUSTOMER.

S	PN 16	285	240	22	8, ø22	—	—						
D	PN 16							250	210	22	8, ø18	—	—
REF. NO.	TYPE OF FLANGE	O.D.	P.C.D.	THK MIN	NO. SIZE OF HOLE	RF ØRF.THK RF FLANGE		O.D.	P.C.D.	THK MIN	NO. SIZE OF HOLE	RF ØRF.THK RF FLANGE	
		SUCTION – ø150						DELIVERY – ø125					

251054

REV.	DESCRIPTION	DRN	CHKD	DATE

PROJECT NAME– | JOB NO.–

FISHER PUMP

TITLE– GA DRAWING FOR V5HS12
18.5Kw–4P MOTOR FR–180 TYPE–1

SCALE 1:1

DRN	PS	10.10.13	DRG.NO.	IDENTIFICATION NO.
CHKD	ST	10.10.13		
APPD	HS	10.10.13		

REV. 0

11.01.18 PUMP STOOL 'E'

DRG.NO.	REV.
	0

CW ROTATION
LOOKING FROM DRIVE END

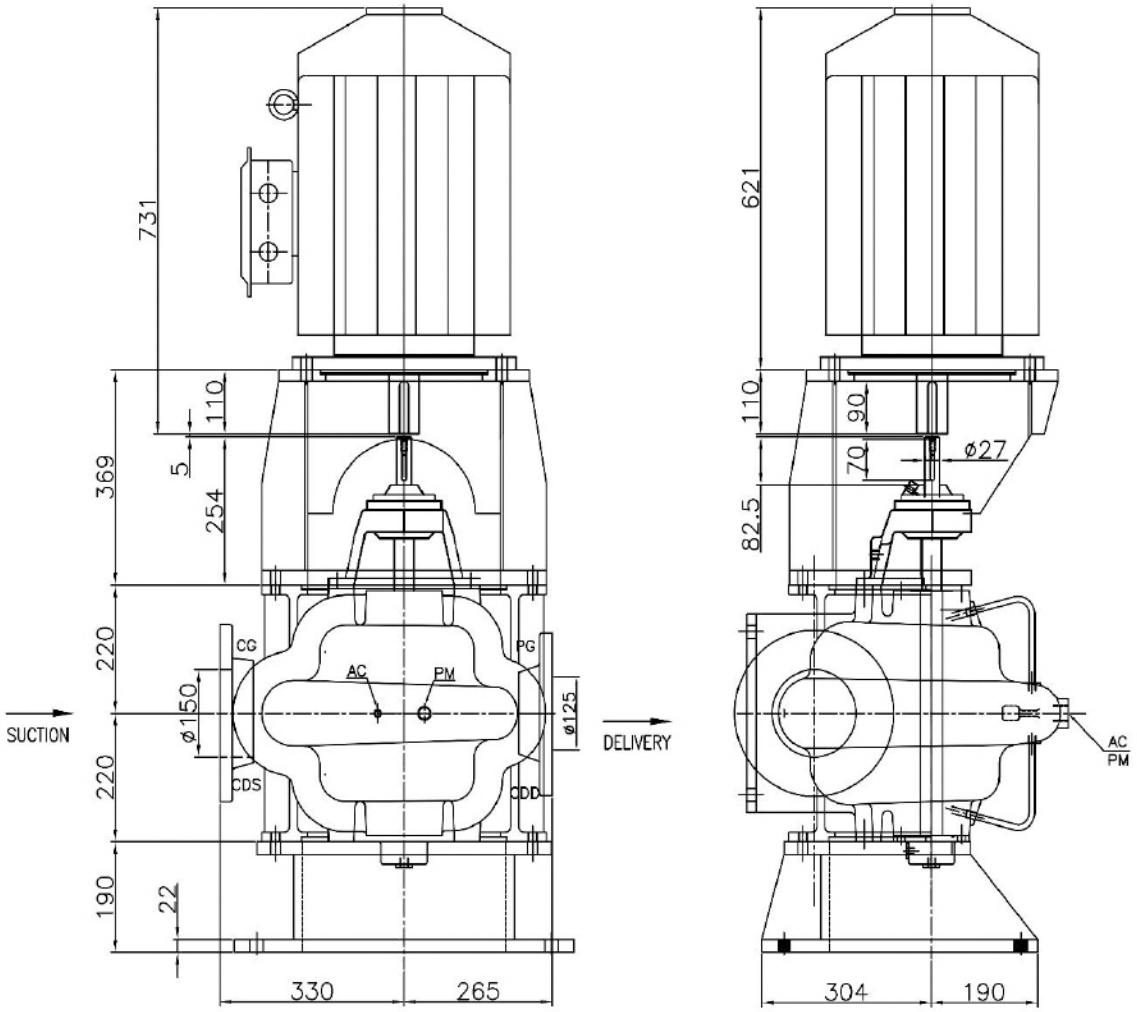

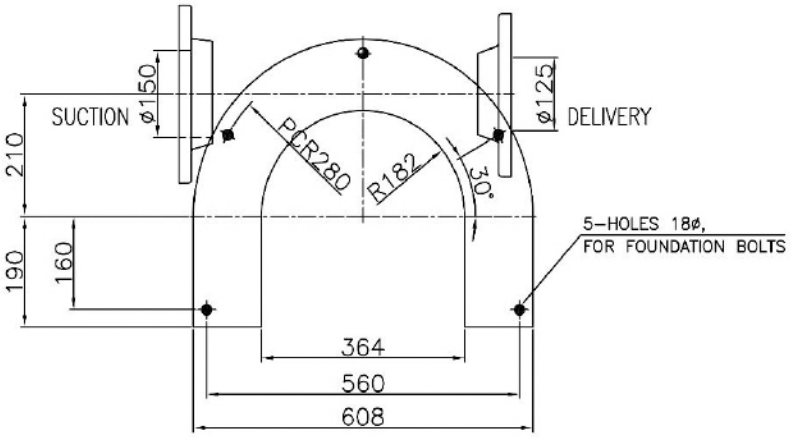

PLAN VIEW DIRECTION –Z
(PUMP STOOL FEET DETAILS)

CONNECTIONS		
ITEM	DESCRIPTION	SIZE(NPT)
CG	COMPOUND GAUGE FOR SUCTION	3/8"
PG	PRESSURE GAUGE FOR DELIVERY	3/8"
AC	AIR COCK	3/8"
PM	PRIMING	1/2"
CDS	CASING DRAIN(SUCTION SIDE)	1/2"
CDD	CASING DRAIN(DELIVERY SIDE)	1/2"

** GAUGE CONNECTIONS DRILLED AND TAPPED ONLY WHEN SPECIFICALLY REQUESTED BY THE CUSTOMER.

S	PN 16	285	240	22	8, ø22	—	—						
D	PN 16							250	210	22	8, ø18	—	—
REF. NO.	TYPE OF FLANGE	O.D.	P.C.D.	THK MIN	NO. SIZE OF HOLE	RF FLANGE	ØRF.THK	O.D.	P.C.D.	THK MIN	NO. SIZE OF HOLE	RF FLANGE	ØRF.THK
		SUCTION – ø150						DELIVERY – ø125					

251054

REV.	DESCRIPTION	DRN	CHKD	DATE

PROJECT NAME– | JOB NO.–

FISHER PUMP

TITLE– GA DRAWING FOR V5HS12
30KW–4P MOTOR FR–200
TYPE–1

SCALE 1:1

DRN	PS	10.10.13	DRG.NO.	IDENTIFICATION NO.
CHKD	ST	10.10.13		
APPD	HS	10.10.13		

REV. 0

11.01.18 PUMP STOOL 'E'

DRG.NO.	REV.
	0

CW ROTATION
LOOKING FROM DRIVE END

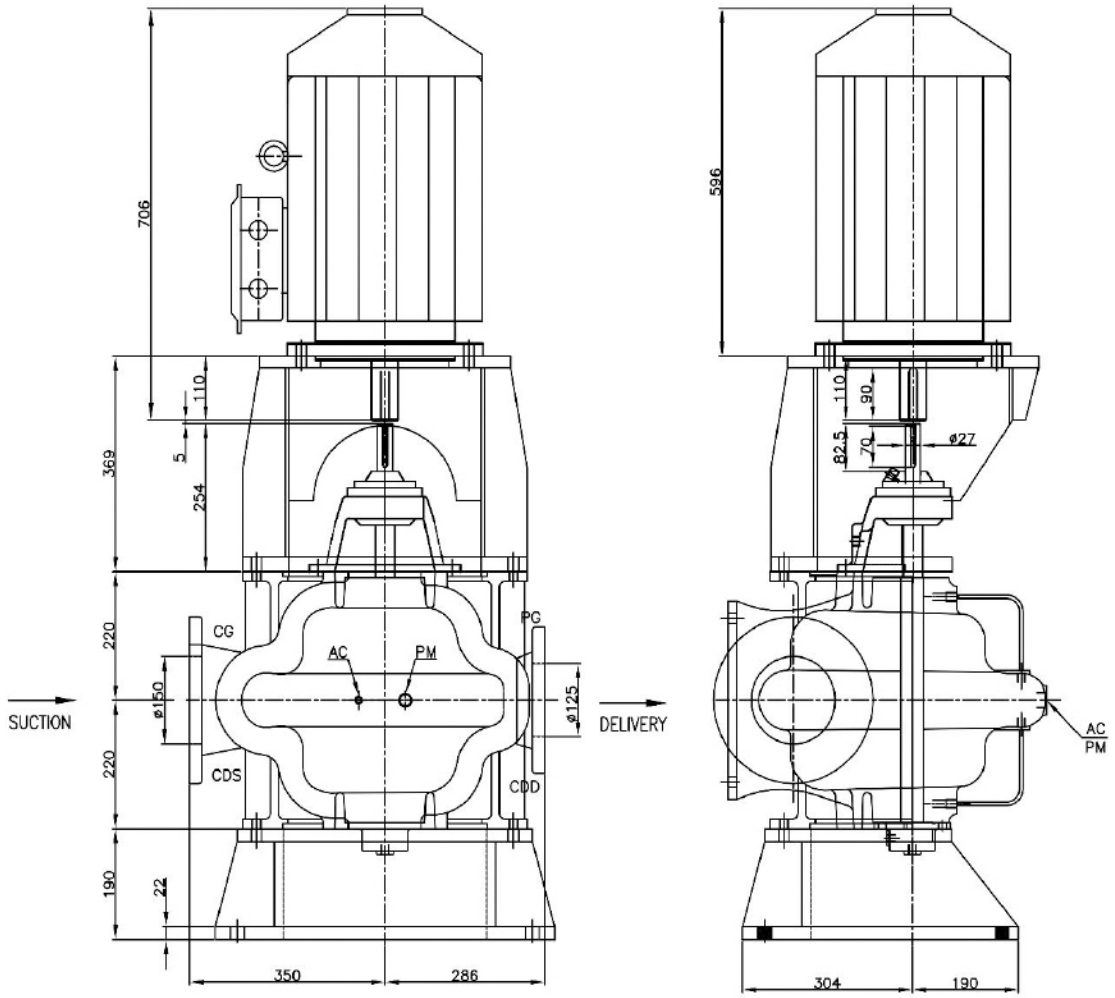

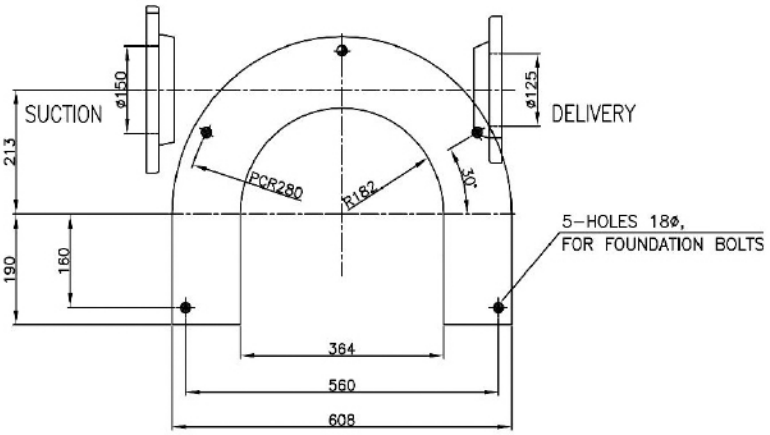

PLAN VIEW DIRECTION –Z
(PUMP STOOL FEET DETAILS)

CONNECTIONS		
ITEM	DESCRIPTION	SIZE(NPT)
CG	COMPOUND GAUGE FOR SUCTION	3/8"
PG	PRESSURE GAUGE FOR DELIVERY	3/8"
AC	AIR COCK	3/8"
PM	PRIMING	3/4"
CDS	CASING DRAIN(SUCTION SIDE)	1/2"
CDD	CASING DRAIN(DELIVERY SIDE)	1/2"

** GAUGE CONNECTIONS DRILLED AND TAPPED ONLY WHEN SPECIFICALLY REQUESTED BY THE CUSTOMER.

S	PN 16	285	240	22	8, ø22	—	—						
D	PN 16							250	210	22	8, ø18	—	—
REF. NO.	TYPE OF FLANGE	O.D.	P.C.D.	THK MIN	NO. SIZE OF HOLE	RF ø / RF	RF.THK / FLANGE	O.D.	P.C.D.	THK MIN	NO. SIZE OF HOLE	RF ø / RF	RF.THK / FLANGE
		SUCTION – ø150						DELIVERY – ø125					

251054

REV.	DESCRIPTION	DRN	CHKD	DATE

PROJECT NAME–			JOB NO.–
FISHER PUMP			
TITLE– GA DRAWING FOR V5HS13 22Kw–4P MOTOR FR–180			SCALE 1:1
DRN	PS	10.10.13	DRG.NO. / IDENTIFICATION NO. / REV. 0
CHKD	ST	10.10.13	
APPD	HS	10.10.13	

TYPE–1

11.01.18 PUMP STOOL 'E'

DRG.NO.	REV.
	0

CW ROTATION
LOOKING FROM DRIVE END

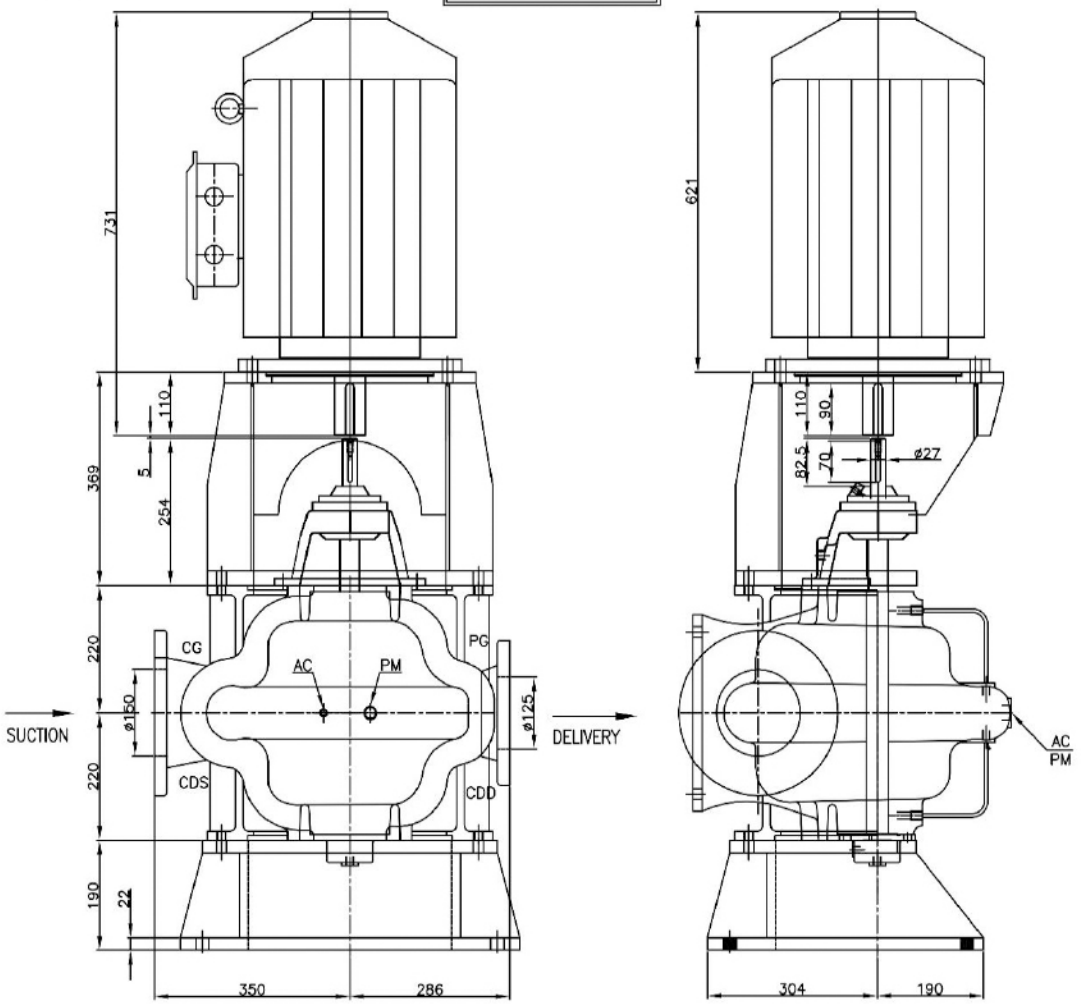

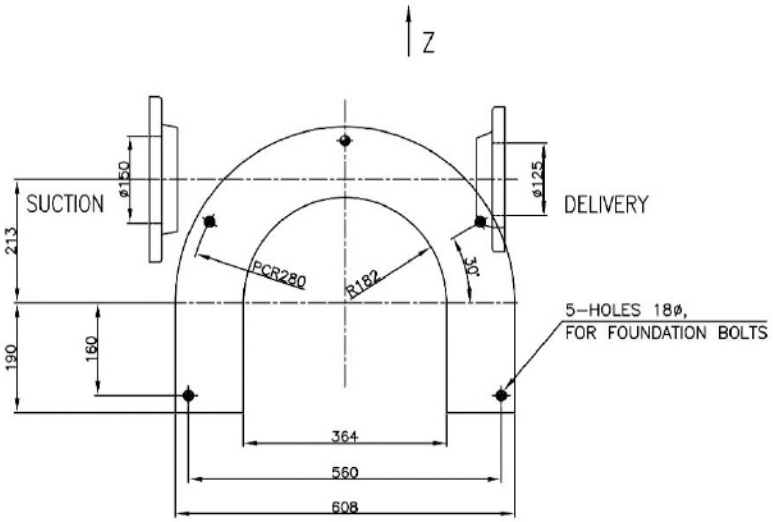

PLAN VIEW DIRECTION –Z
(PUMP STOOL FEET DETAILS)

CONNECTIONS		
ITEM	DESCRIPTION	SIZE(NPT)
CG	COMPOUND GAUGE FOR SUCTION	3/8"
PG	PRESSURE GAUGE FOR DELIVERY	3/8"
AC	AIR COCK	3/8"
PM	PRIMING	3/4"
CDS	CASING DRAIN(SUCTION SIDE)	1/2"
CDD	CASING DRAIN(DELIVERY SIDE)	1/2"

** GAUGE CONNECTIONS DRILLED AND TAPPED ONLY WHEN SPECIFICALLY REQUESTED BY THE CUSTOMER.

S	PN 16	285	240	22	8, ø22	—	—							
D	PN 16							250	210	22	8, ø18	—	—	
REF. NO.	TYPE OF FLANGE	O.D.	P.C.D.	THK MIN	NO. SIZE OF HOLE	RF ØRF.THK RF FLANGE		O.D.	P.C.D.	THK MIN	NO. SIZE OF HOLE	RF ØRF.THK RF FLANGE		
		SUCTION – ø150						DELIVERY – ø125						

251054

11.01.18 PUMP STOOL 'E'

REV.	DESCRIPTION	DRN	CHKD	DATE

PROJECT NAME–			JOB NO.–
FISHER PUMP			
TITLE– GA DRAWING FOR V5HS13 30Kw–4P MOTOR FR–200 TYPE–2			SCALE 1:1
DRN	PS	10.10.13	DRG.NO. / IDENTIFICATION NO. / REV. 0
CHKD	ST	10.10.13	
APPD	HS	10.10.13	

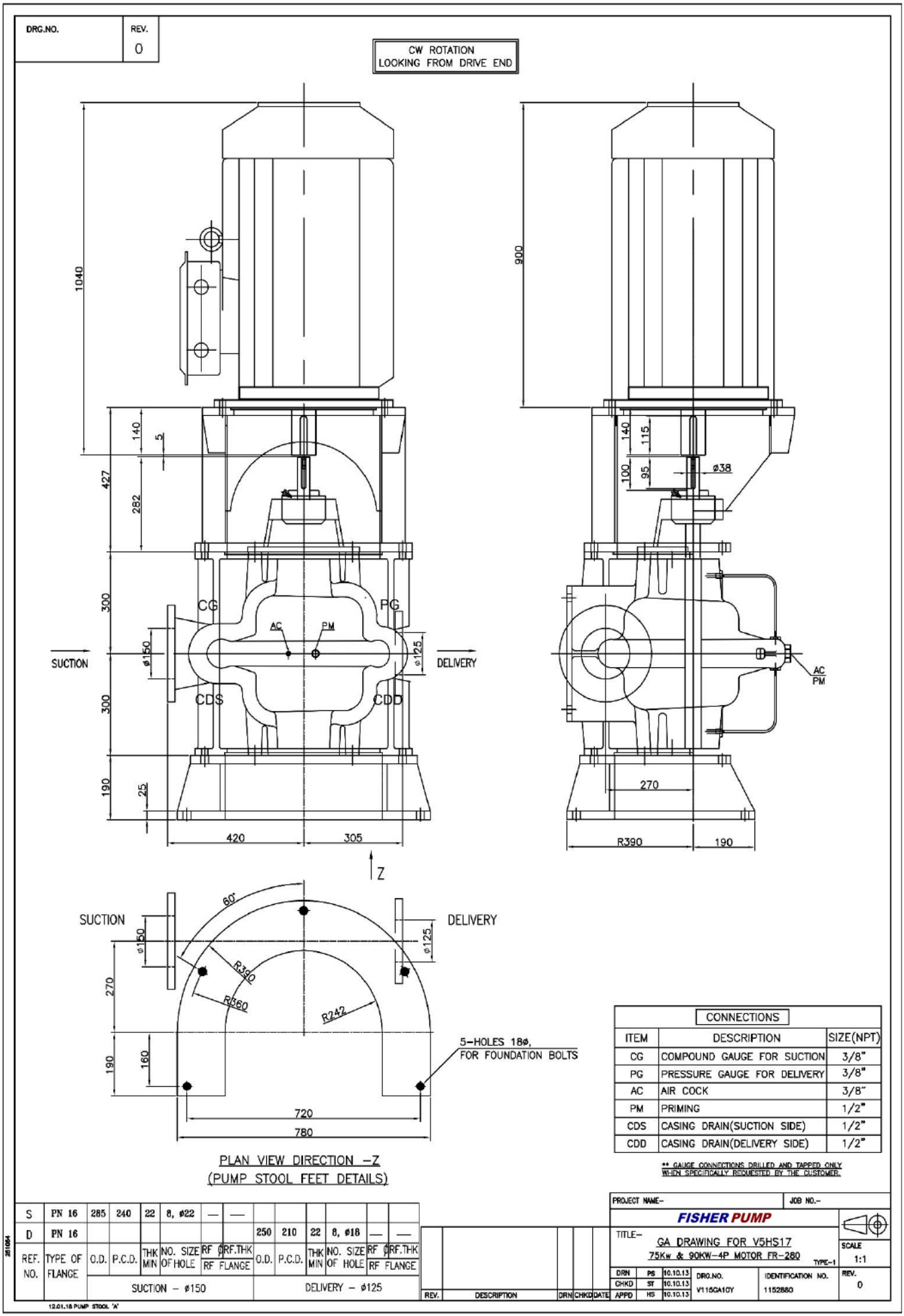
DRG.NO.
REV.
0
CW ROTATION
LOOKING FROM DRIVE END
1040
140
5
427
282
300
300
190
25
420
305
CG
PG
AC
PM
SUCTION
DELIVERY
ø150
ø125
CDS
CDD
900
140
115
100
95
ø38
AC
PM
270
R390
190
Z
SUCTION
DELIVERY
60°
R390
R360
R242
270
190
160
5-HOLES 18ø,
FOR FOUNDATION BOLTS
720
780
PLAN VIEW DIRECTION -Z
(PUMP STOOL FEET DETAILS)
CONNECTIONS
ITEM | DESCRIPTION | SIZE(NPT)
CG | COMPOUND GAUGE FOR SUCTION | 3/8"
PG | PRESSURE GAUGE FOR DELIVERY | 3/8"
AC | AIR COCK | 3/8"
PM | PRIMING | 1/2"
CDS | CASING DRAIN(SUCTION SIDE) | 1/2"
CDD | CASING DRAIN(DELIVERY SIDE) | 1/2"
** GAUGE CONNECTIONS DRILLED AND TAPPED ONLY WHEN SPECIFICALLY REQUESTED BY THE CUSTOMER.
S | PN 16 | 285 | 240 | 22 | 8, ø22 | — | — | | | | |
D | PN 16 | | | | | | | 250 | 210 | 22 | 8, ø18 | — | —
REF. NO. | TYPE OF FLANGE | O.D. | P.C.D. | THK MIN | NO. SIZE OF HOLE | RF ø | RF.THK RF FLANGE | O.D. | P.C.D. | THK MIN | NO. SIZE OF HOLE | RF ø | RF.THK RF FLANGE
SUCTION – ø150
DELIVERY – ø125
REV. | DESCRIPTION | DRN | CHKD | DATE
PROJECT NAME-
JOB NO.-
FISHER PUMP
TITLE-
GA DRAWING FOR V5HS17
75Kw & 90KW-4P MOTOR FR-280
TYPE-1
SCALE 1:1
DRN PS 10.10.13
CHKD ST 10.10.13
APPD HS 10.10.13
DRG.NO. V115GA1CY
IDENTIFICATION NO. 1152880
REV. 0
12.01.18 PUMP STOOL 'A'

DRG.NO.	REV.
	0

CW ROTATION
LOOKING FROM DRIVE END

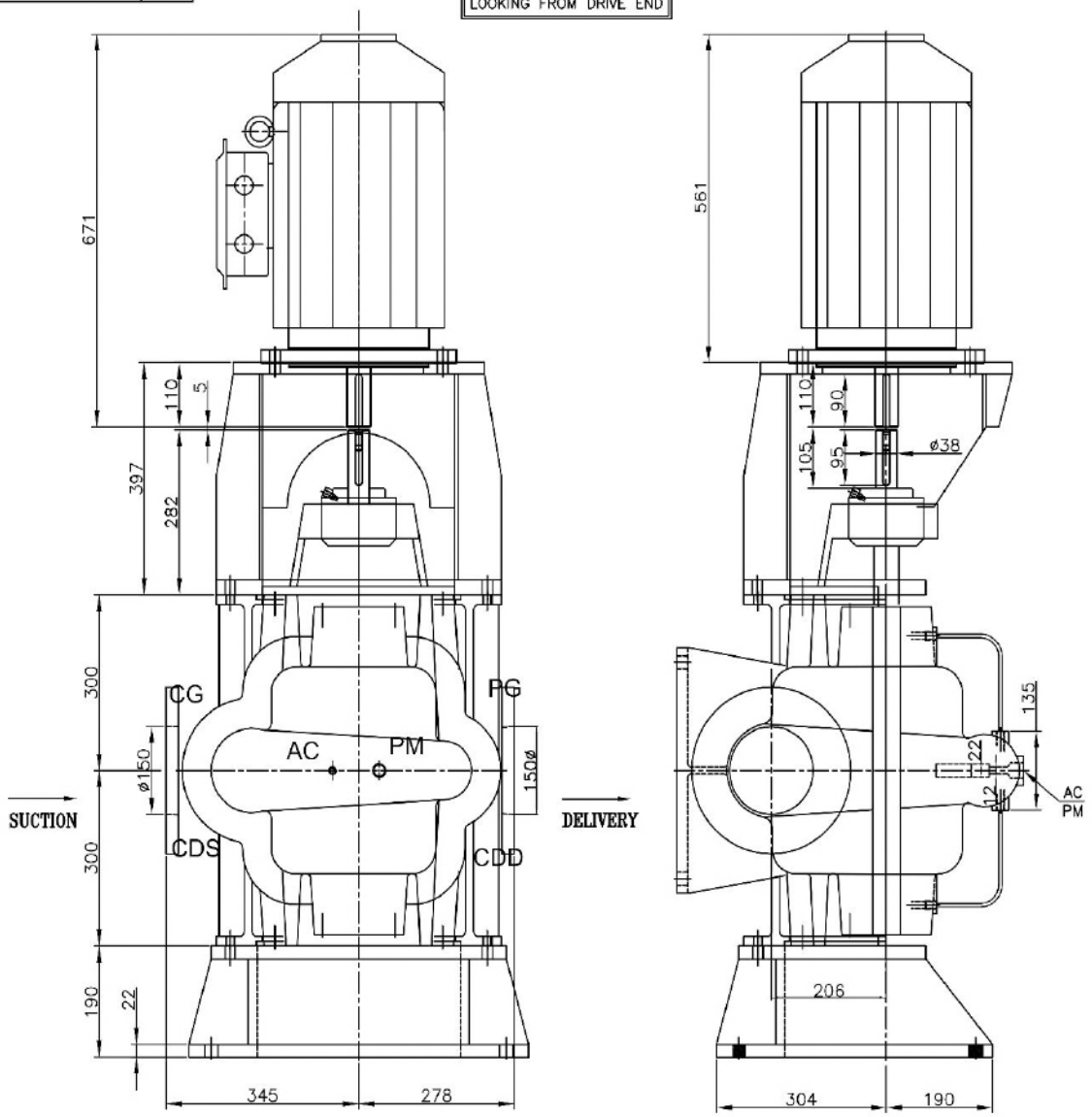

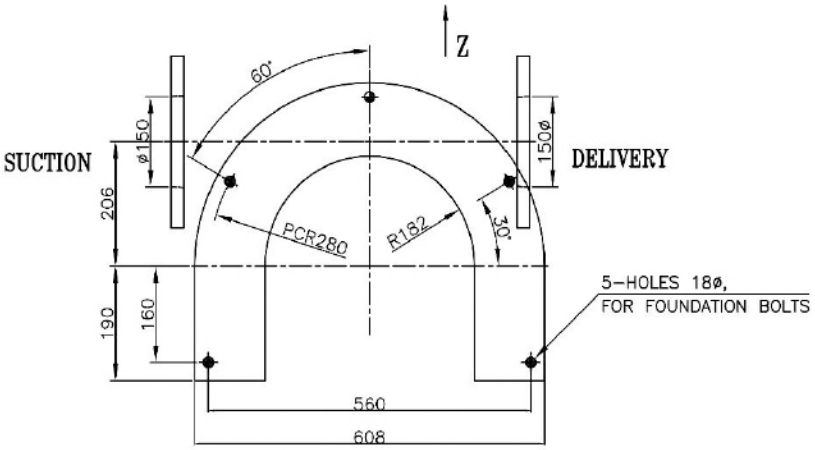

PLAN VIEW DIRECTION -Z
(PUMP STOOL FEET DETAILS)

CONNECTIONS		
ITEM	DESCRIPTION	SIZE(NPT)
CG	COMPOUND GAUGE FOR SUCTION	3/8"
PG	PRESSURE GAUGE FOR DELIVERY	3/8"
AC	AIR COCK	3/8"
PM	PRIMING	3/4"
CDS	CASING DRAIN(SUCTION SIDE)	3/4"
CDD	CASING DRAIN(DELIVERY SIDE)	3/4"

** GAUGE CONNECTIONS DRILLED AND TAPPED ONLY WHEN SPECIFICALLY REQUESTED BY THE CUSTOMER.

S	PN 16	285	240	22	8, ø22	—	—						
D	PN 16							285	240	22	8, ø18	—	—
REF. NO.	TYPE OF FLANGE	O.D.	P.C.D.	THK MIN	NO. SIZE OF HOLE	RFø RF FLANGE	RF.THK RF FLANGE	O.D.	P.C.D.	THK MIN	NO. SIZE OF HOLE	RFø RF FLANGE	RF.THK RF FLANGE
		SUCTION - ø150						DELIVERY - ø150					

251054

REV.	DESCRIPTION	DRN	CHKD	DATE

PROJECT NAME- | JOB NO.-

FISHER PUMP

TITLE- GA DRAWING FOR V6HS10
15KW-4P MOTOR FR-160
TYPE-1

DRN	PS	10.10.13	DRG.NO.	IDENTIFICATION NO.
CHKD	ST	10.10.13		
APPD	HS	10.10.13		

SCALE 1:1
REV. 0

18.01.18 PUMP STOOL 'E'

DRG.NO.	REV.
	0

CW ROTATION
LOOKING FROM DRIVE END

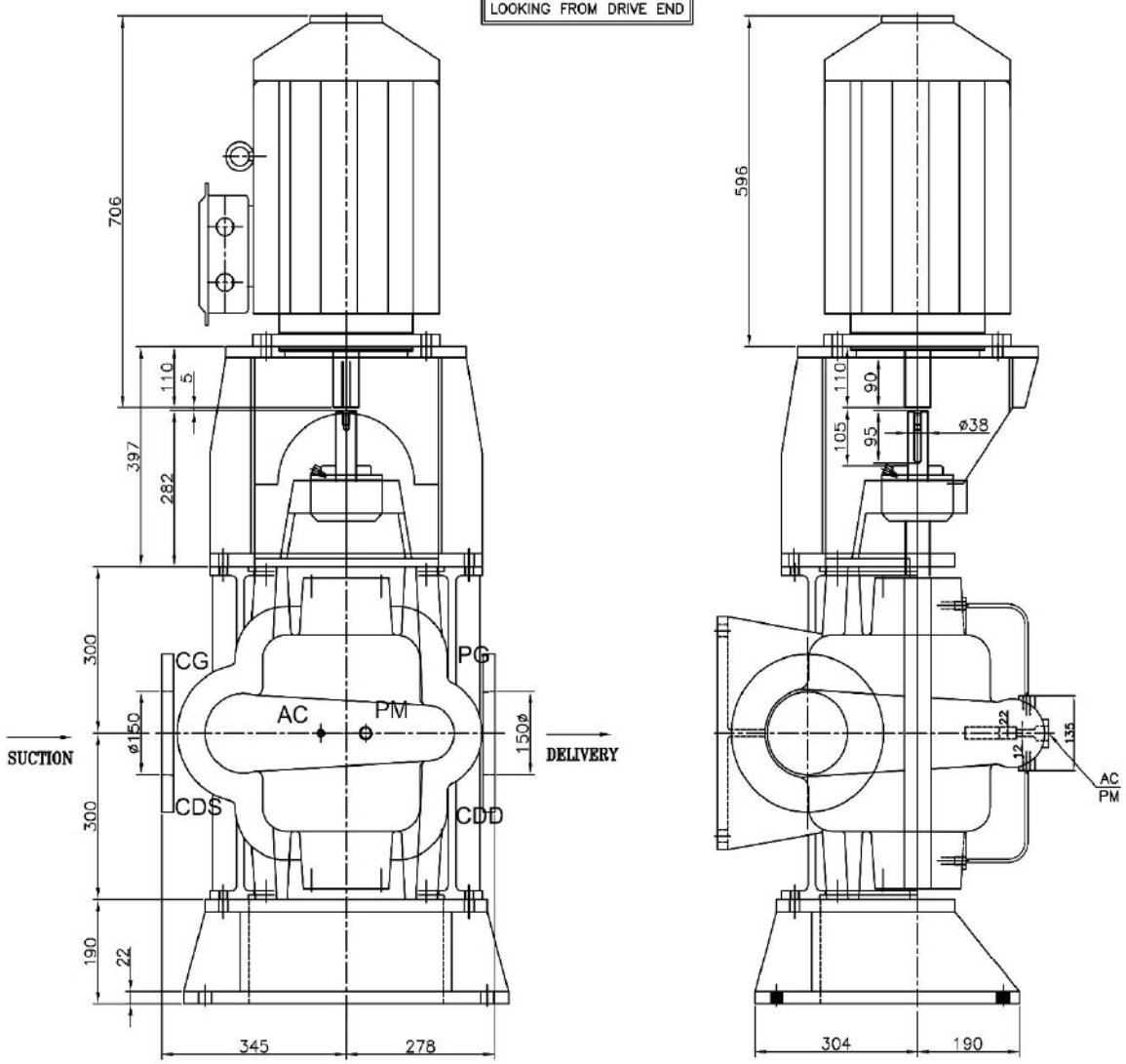

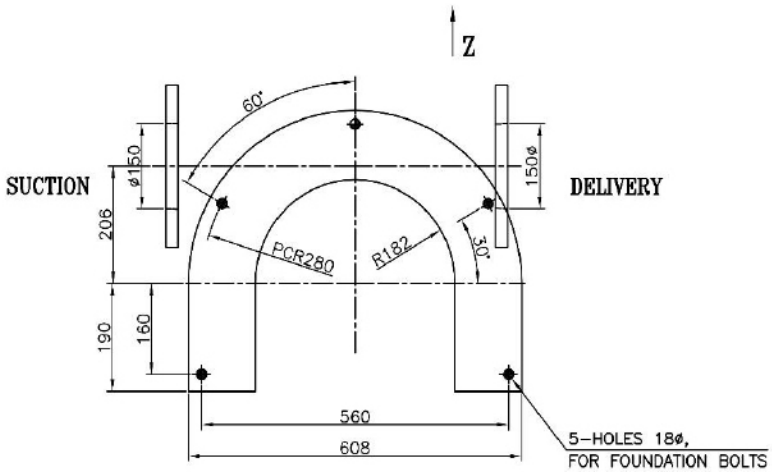

PLAN VIEW DIRECTION -Z
(PUMP STOOL FEET DETAILS)

CONNECTIONS		
ITEM	DESCRIPTION	SIZE(NPT)
CG	COMPOUND GAUGE FOR SUCTION	3/8"
PG	PRESSURE GAUGE FOR DELIVERY	3/8"
AC	AIR COCK	3/8"
PM	PRIMING	3/4"
CDS	CASING DRAIN(SUCTION SIDE)	3/4"
CDD	CASING DRAIN(DELIVERY SIDE)	3/4"

** GAUGE CONNECTIONS DRILLED AND TAPPED ONLY WHEN SPECIFICALLY REQUESTED BY THE CUSTOMER.

S	PN 16	285	240	22	8, ø22	—	—						
D	PN 16							285	240	22	8, ø18	—	—
REF. NO.	TYPE OF FLANGE	O.D.	P.C.D.	THK MIN	NO. SIZE OF HOLE	RFø	RF.THK RF FLANGE	O.D.	P.C.D.	THK MIN	NO. SIZE OF HOLE	RFø	RF.THK RF FLANGE
		SUCTION - ø150						DELIVERY - ø150					

251054

REV.	DESCRIPTION	DRN	CHKD	DATE

PROJECT NAME- | JOB NO.-

FISHER PUMP

TITLE- GA DRAWING FOR V6HS10
18.5KW-4P MOTOR FR-180
TYPE-6

DRN	PS	10.10.13	DRG.NO.	IDENTIFICATION NO.
CHKD	ST	10.10.13		
APPD	HS	10.10.13		

SCALE 1:1
REV. 0

18.01.18 PUMP STOOL "E"

DRG.NO.	REV.
	0

CW ROTATION
LOOKING FROM DRIVE END

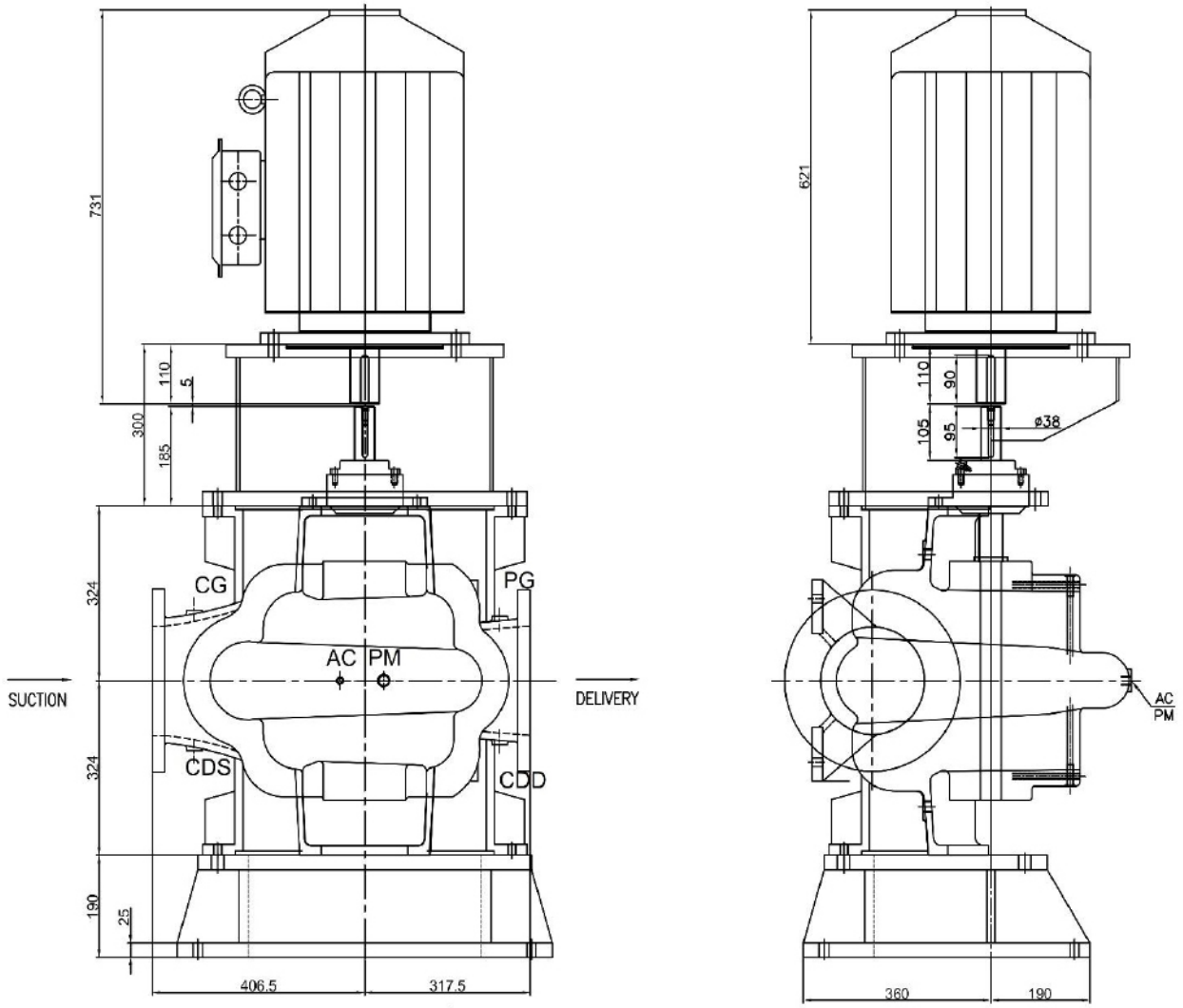

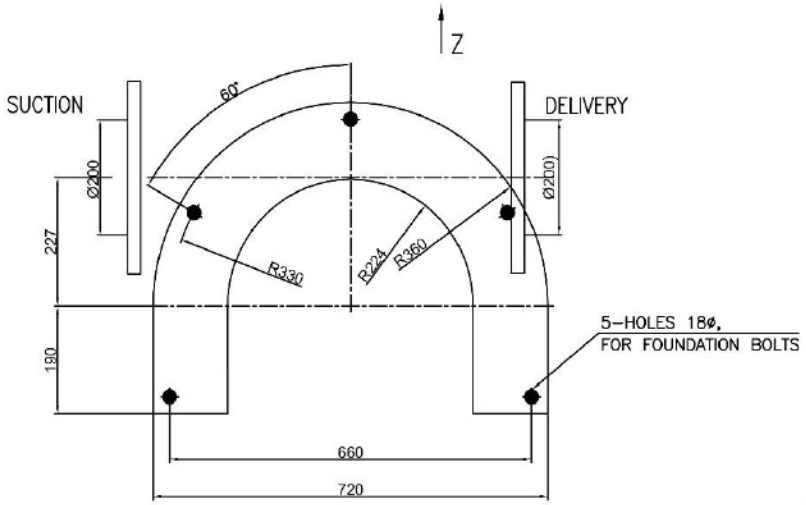

PLAN VIEW DIRECTION –Z
(PUMP STOOL FEET DETAILS)

CONNECTIONS

ITEM	DESCRIPTION	SIZE(NPT)
CG	COMPOUND GAUGE FOR SUCTION	3/8"
PG	PRESSURE GAUGE FOR DELIVERY	3/8"
AC	AIR COCK	3/8"
PM	PRIMING	1/2"
CDS	CASING DRAIN(SUCTION SIDE)	3/4"
CDD	CASING DRAIN(DELIVERY SIDE)	3/4"

** GAUGE CONNECTIONS DRILLED AND TAPPED ONLY WHEN SPECIFICALLY REQUESTED BY THE CUSTOMER.

REF. NO.	TYPE OF FLANGE	O.D.	P.C.D.	THK MIN	NO. OF HOLE	SIZE	RF ø	RF.THK RF FLANGE	O.D.	P.C.D.	THK MIN	NO. OF HOLE	SIZE	RF ø	RF.THK RF FLANGE
S	PN 16	340	295	24	12,	ø22	—	—							
D	PN 16								340	295	24	12,	ø22	—	—
		SUCTION – ø200							DELIVERY – ø200						

251054

REV.	DESCRIPTION	DRN	CHKD	DATE

PROJECT NAME– JOB NO.–

FISHER PUMP

TITLE– GA DRAWING FOR V8HS12
30KW–4P MOTOR FR–200
TYPE–1

DRN	PS	10.10.13	DRG.NO.	IDENTIFICATION NO.
CHKD	ST	10.10.13		
APPD	HS	10.10.13		

SCALE 1:1
REV. 0

18.01.18 PUMP STOOL 'E'