PUMP MODEL – 16HS32

GENERAL ARRANGEMENT DRAWING FOR SINGLE STAGE AXIALLY SPLIT CASE PUMP MODEL – 16HS32

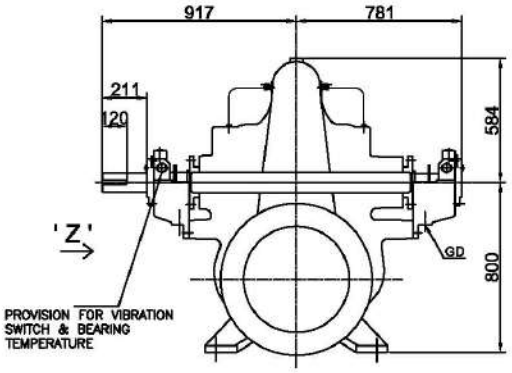

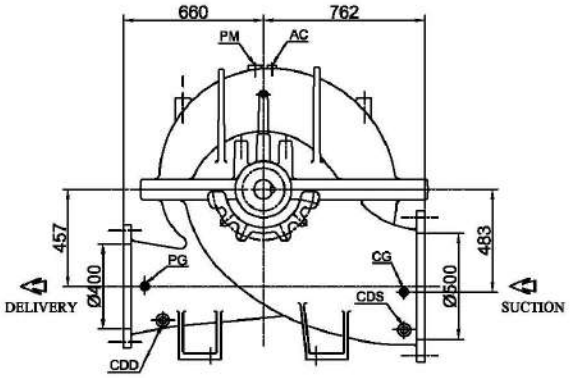

VIEW IN DIRECTION OF 'Z'

CLOCK-WISE ROTATION LOOKING FROM DRIVE END

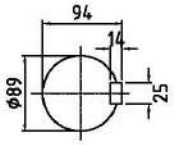

SCALE - 4:1
SHAFT DETAIL AT COUPLING END

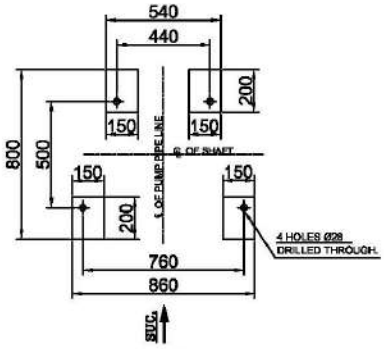

PLAN OF PUMP FEET

APPROX. NET WEIGHT – 2814kg.
ALL DIMENSIONS ARE IN MM.

CONNECTIONS		
ITEM	DESCRIPTION	SIZE(NPT)
GD	GLAND DRAIN	1"
CG	COMPOUND GAUGE FOR SUCTION	3/8"
PG	PRESSURE GAUGE FOR DELIVERY	3/8"
AC	AIR COCK	3/8"
PM	PRIMING	1–1/4"
CDS	CASING DRAIN(SUCTION SIDE)	1"
CDD	CASING DRAIN(DELIVERY SIDE)	1"

** GAUGE CONNECTIONS DRILLED AND TAPPED ONLY WHEN SPECIFICALLY REQUESTED BY THE CUSTOMER.

FISHER PUMP

S	PN 25	730	660	44	20, ø36	—	—											
D	PN 25							620	550	40	16, ø36	—	—					
TYPE OF FLANGE		O.D.	P.C.D.	THK MIN	NO., SIZE OF HOLE	RF ø	RF.THK	O.D.	P.C.D.	THK MIN	NO., SIZE OF HOLE	RF ø	RF.THK					
		SUCTION –ø 500				RF FLANGE		DELIVERY – ø400				RF FLANGE		REV	DESCRIPTION	DRN	CHKD	

PROJECT NAME:–	JOB NO.:–
TITLE – GA DRAWING FOR 16HS32	SCALE 1:1
DRN AD 29.04.14 / CHKD ST 29.04.14 / APPD HS 29.04.14	DRG. NO. PSF/16HS32/GA-01
	REV 0