PUMP MODEL– 4HFTD13

GENERAL ARRANGEMENT DRAWING FOR TWO STAGE AXIALLY SPLIT–CASE PUMP MODEL – 4HFTD13

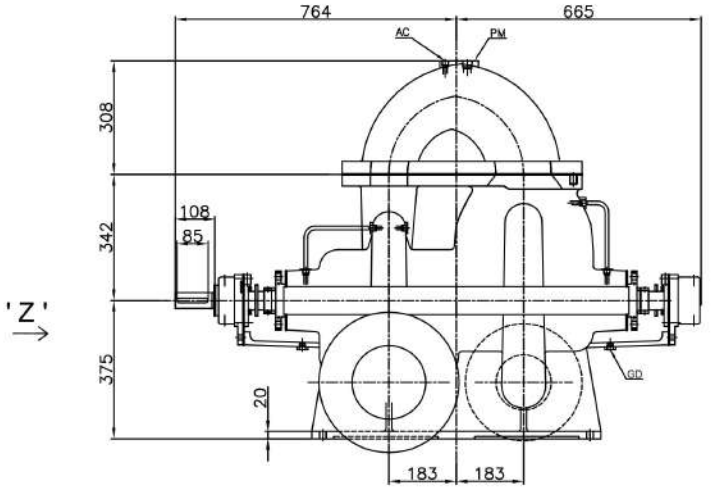

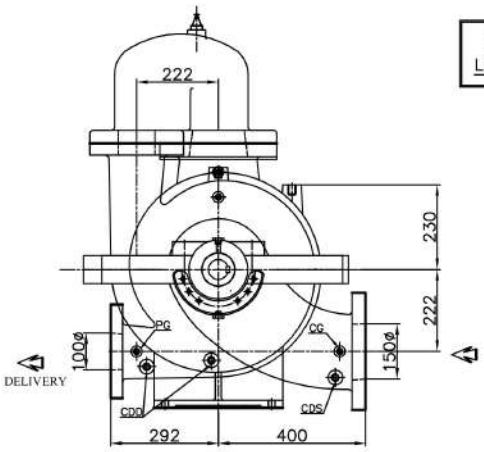

VIEW IN DIRECTION OF ' Z '

CLOCK WISE ROTATION
LOOKING FROM DRIVE END

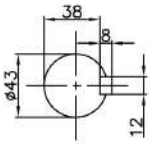

SCALE–4:1
SHAFT DETAILS
AT COUPLING END

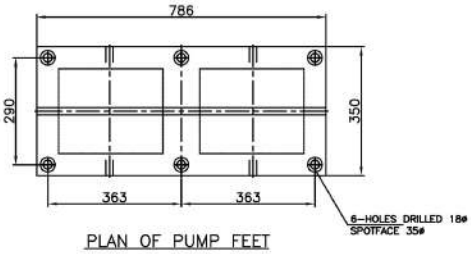

PLAN OF PUMP FEET

APPROX. NETT WEIGHT – kg.
ALL DIMENSIONS ARE IN MM.

CONNECTIONS

ITEM	DESCRIPTION	SIZE(NPT)
GD	GLAND DRAIN	3/8"
CG	COMPOUND GAUGE FOR SUCTION	3/8"
PG	PRESSURE GAUGE FOR DELIVERY	3/8"
AC	AIR COCK	3/8"
PM	PRIMING	3/4"
CDS	CASING DRAIN(SUCTION SIDE)	1/2"
CDD	CASING DRAIN(DELIVERY SIDE)	1/2"

REF. NO.	TYPE OF FLANGE	O.D.	P.C.D.	THK MIN	NO. SIZE OF HOLE	RF Ø / RF FLANGE	RF.THK	O.D.	P.C.D.	THK MIN	NO. SIZE OF HOLE	RF Ø / RF FLANGE	RF.THK
S	ANSI#250FF	12–1/2"	10–5/8"	1–7/16"	12, ø7/8"	—	—						
D	ANSI#250FF							10"	7–7/8"	1–1/4"	8, ø7/8"	—	—
		SUCTION – ø150(6")						DELIVERY – ø100(4")					

REV	DESCRIPTION	DRN	CHKD	DATE

FISHER PUMP

TITLE: GA DRG. FOR 4HFTD13

DRN	AD	18.06.20	DRG. NO. PSF/4HFTD13/GA–01
CHKD	TK	18.06.20	
APPD	HS	18.06.20	

SCALE 1:1

REV 0