PUMP MODEL – 4HF10

GENERAL ARRANGEMENT DRAWING FOR SINGLE STAGE AXIALLY SPLIT CASE PUMP MODEL – 4HF10

CLOCK–WISE ROTATION
LOOKING FROM DRIVE END

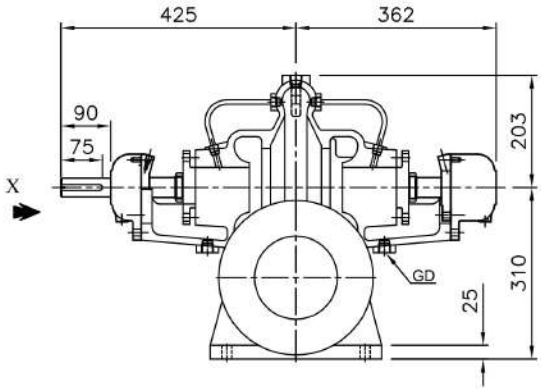

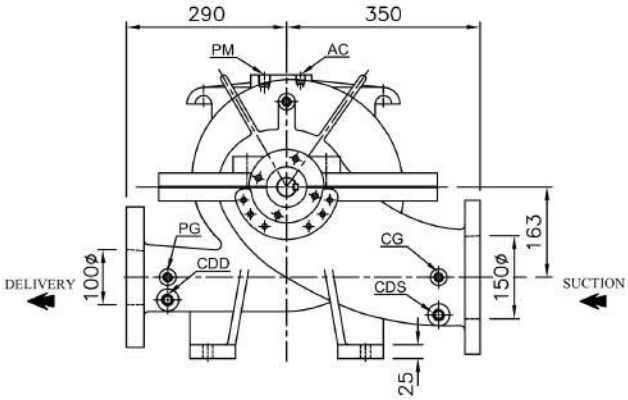

VIEW IN DIRECTION OF 'X'

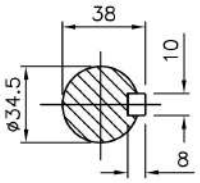

SCALE – 4:1
SHAFT DETAIL AT
COUPLING END

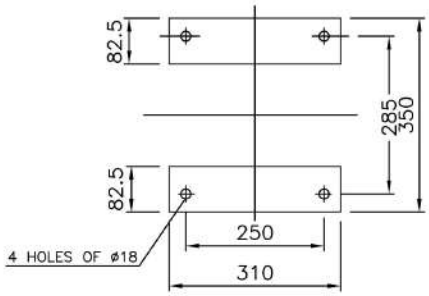

PLAN OF PUMP FEET

ALL DIMENSIONS ARE IN MM.
APPROX. NETT WEIGHT – 205kg.

CONNECTIONS		
ITEM	DESCRIPTION	SIZE (NPT)
GD	GLAND DRAIN	1/2"
CG	COMP. GAUGE FOR SUCTION	3/8"
PG	PR. GAUGE FOR DELIVERY	3/8"
AC	AIR COCK	3/8"
PM	PRIMING	1/2"
CDS	CASING DRAIN (SUCT.SIDE)	1/2"
CDD	CASING DRAIN (DELY.SIDE)	1/2"

FLANGE TABLE

S	ANSI 125#FF	11"	9–1/2"	1"	8, ø7/8"	—	—						
D	ANSI 250#FF							10"	7–7/8"	1–1/4"	8, ø7/8"	—	—
REF. NO.	TYPE OF FLANGE	O.D.	P.C.D.	THK MIN	NO. SIZE OF HOLE	RF Ø / RF FLANGE	RF.THK	O.D.	P.C.D.	THK MIN	NO. SIZE OF HOLE	RF Ø / RF FLANGE	RF.THK
		SUCTION – 150(6")						DELIVERY – 100(4")					

REV	DESCRIPTION	DRN	CHKD

FISHER PUMP

TITLE–
GA DRAWING FOR 4HF10

DRN	AD	18.05.20
CHKD	SP	18.05.20
APPD	HS	18.05.20

DRG. NO.
PSF/4HF10/GA–01/0

SCALE 1:1

REV 0