PUMP MODEL – 6HF10

# GENERAL ARRANGEMENT DRAWING FOR SINGLE STAGE AXIALLY SPLIT CASE PUMP MODEL – 6HF10

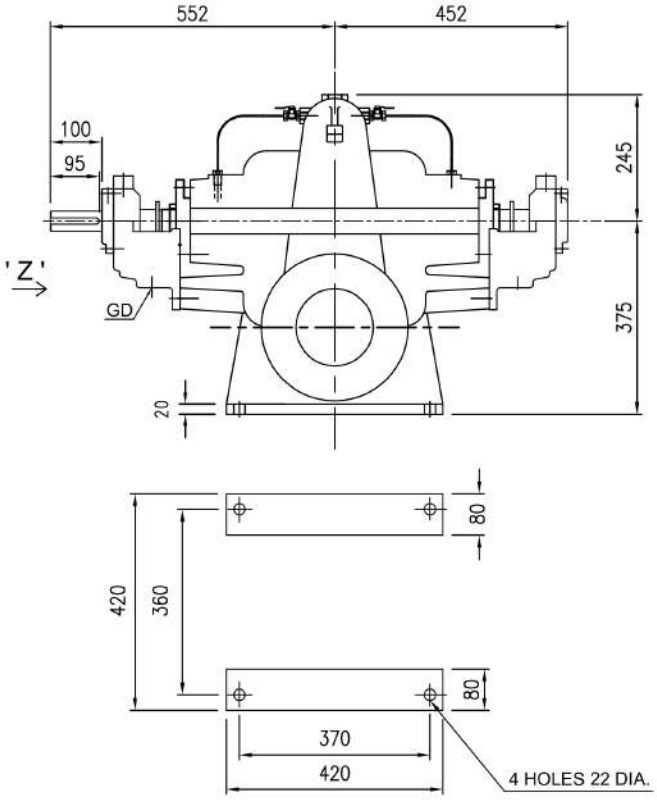


**PLAN OF PUMP FEET**

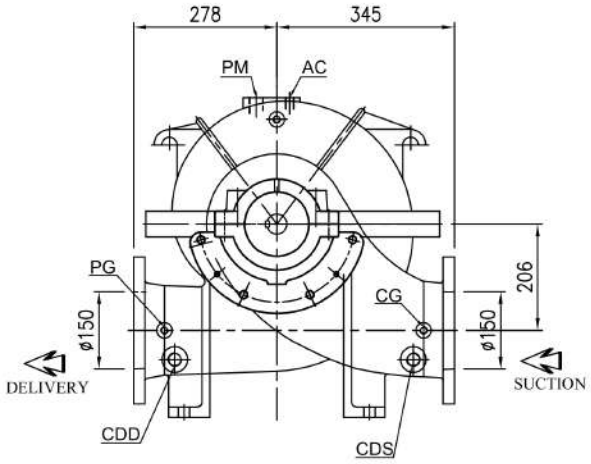


VIEW IN DIRECTION OF 'Z'

**CLOCK-WISE ROTATION LOOKING FROM DRIVE END**

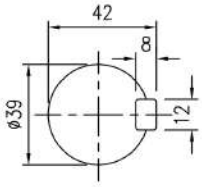


SCALE – 5:1
SHAFT DETAIL AT COUPLING END

**APPROX. NET WEIGHT – 334kg.**
**ALL DIMENSIONS ARE IN MM.**

**FISHER PUMP**

| CONNECTION | | |
|---|---|---|
| ITEM | DESCRIPTION | SIZE(NPT) |
| GD | GLAND DRAIN | 1/2" |
| CG | COMPOUND GAUGE FOR SUCTION | 3/8" |
| PG | PRESSURE GAUGE FOR DELIVERY | 3/8" |
| AC | AIR COCK | 3/8" |
| PM | PRIMING | 3/4" |
| CDS | CASING DRAIN(SUCTION SIDE) | 3/4" |
| CDD | CASING DRAIN(DELIVERY SIDE) | 3/4" |

** GAUGE CONNECTIONS DRILLED AND TAPPED ONLY WHEN SPECIFICALLY REQUESTED BY THE CUSTOMER.

| REF. NO. | TYPE OF FLANGE. | O.D. | P.C.D. | THK MIN | NO SIZE OF HOLE | RFø R.F.FLANGE | RF THK | O.D. | P.C.D. | THK MIN | NO SIZE OF HOLE | RFø R.F. FLANGE | RF THK |
|---|---|---|---|---|---|---|---|---|---|---|---|---|---|
| S | ANSI 125#FF | 11" | 9-1/2" | 1" | 8,ø7/8" | | | | | | | | |
| D | ANSI 250#FF | | | | | | | 12-1/2" | 10-5/8" | 7/16" | 12,ø7/8" | | |
| | | SUCTION~ ø150 (6") | | | | | | DELIVERY~ ø150 (6") | | | | | |

| REV | DESCRIPTION | DRN | CHKD |
|---|---|---|---|
| | | | |

| | | | |
|---|---|---|---|
| TITLE | GA DRAWING FOR 6HF10 (CW) | | |
| DRN | AD | 11.08.16 | DRG. NO. 6HF10/GA-01/0 |
| CHKD | ST | 11.08.16 | |
| APPD | HS | 11.08.16 | |

SCALE 1:1

REV 0