GENERAL ARRANGEMENT DRAWING FOR END SUCTION BACK PULL OUT TYPE PUMP EF 125-310

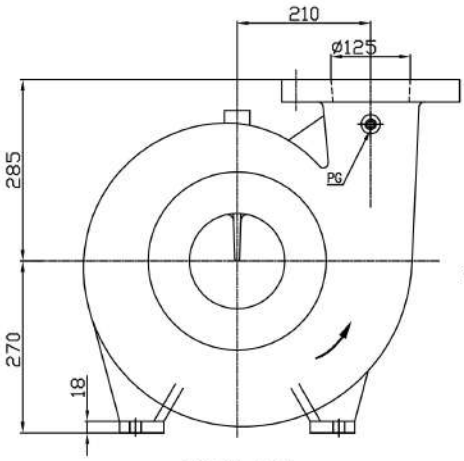

VIEW-'A'

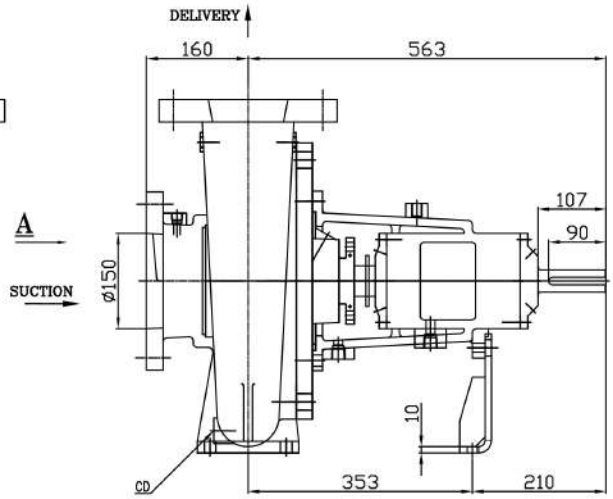

CLOCK WISE ROTATION
LOOKING FROM DRIVE END

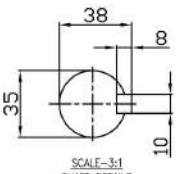

SCALE-3:1
SHAFT DETAILS
AT COUPLING END

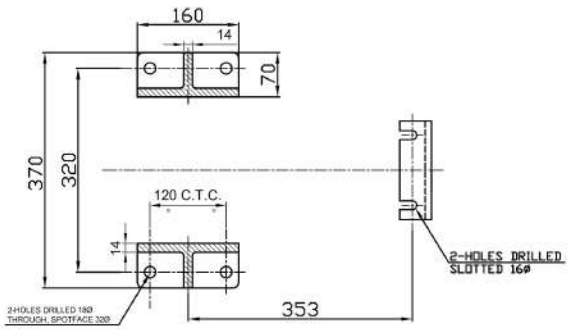

FOOT PRINT

PUMP WEIGHT 190Kg(Approx)
ALL DIMENSIONS ARE IN MM.

CONNECTIONS		
ITEM	DESCRIPTION	SIZE(NPT)
PG/CG	PRESSURE GAUGE FOR DELIVERY	3/8"
AC	AIR COCK	3/8"
CD	CASING DRAIN	1/2"

** GAUGE CONNECTIONS DRILLED AND TAPPED ONLY WHEN SPECIFICALLY REQUESTED BY THE CUSTOMER.

NOTES:

1. AN ARROW MARK WILL BE ON THE CASING TO INDICATE DIRECTION OF ROTATION.
2. COMPOUND GAUGE, DISCHARGE GAUGE, CIRCULATION RELIEF VALVE (FOR MOTOR ONLY) WILL BE SUPPLIED WITH UL LISTED PUMP

REF. NO.	TYPE OF FLANGE	O.D.	P.C.D.	THK MIN	NO., SIZE OF HOLE	RF Ø	RF.THK	O.D.	P.C.D.	THK MIN	NO. SIZE OF HOLE	RF Ø	RF.THK
S	ANSI#125FF	11"	9-1/2"	1"	8, ø7/8"	—	—						
D	ANSI#250FF							11"	9-1/4"	1-3/8"	8, ø7/8"	—	—
		SUCTION - ø150						DELIVERY - ø125					

THIS DRG. MUST NOT BE COPIED WITHOUT WRITTEN PERMISSION AND THE CONTENTS THEREOF MUST NOT BE IMPARTED TO A THIRD PARTY NOR BE USED FOR ANY UNAUTHORISED PURPOSES. CONTRAVENTION WILL BE PROSECUTED.

FIRST ANGLE PROJECTION

REV. NO.	REVISION	ZONE	DATE	INITIAL	CHG.

FISHER PUMP

TITLE- GA DRAWING FOR EF 125-310

DRN.	AD	28.12.21	SCALE	DRAWING NO.	IDENTIFICATION NO.	REV.
CHD.	TK	28.12.21	1:1	1003GA10Y		0
APPD.	HS	28.12.21				